Searches for Heavy Stable Charged Particles at the LHC

Loïc Quertenmont
on behalf of CMS and ATLAS

12 November 2015

What are we talking about ?

Appears in many scenarios and in various forms….

SUSY

SMP	LSP	Scenario	Conditions
$\tilde{\tau}_1$	$\tilde{\chi}_1^0$	MSSM	$\tilde{\tau}_1$ mass (determined by $m^2_{\tilde{\tau}_{L,R}}$, μ, $\tan\beta$, and A_τ) close to $\tilde{\chi}_1^0$ mass.
	$\tilde{G}$	GMSB	Large N, small M, and/or large $\tan\beta$.
		$\tilde{g}$MSB	No detailed phenomenology studies, see [23].
		SUGRA	Supergravity with a gravitino LSP, see [24].
	$\tilde{\tau}_1$	MSSM	Small $m_{\tilde{\tau}_{L,R}}$ and/or large $\tan\beta$ and/or very large A_τ.
		AMSB	Small m_0, large $\tan\beta$.
		$\tilde{g}$MSB	Generic in minimal models.
$\tilde{\ell}_{i1}$	$\tilde{G}$	GMSB	$\tilde{\tau}_1$ NLSP (see above). $\tilde{e}_1$ and $\tilde{\mu}_1$ co-NLSP and also SMP for small $\tan\beta$ and μ.
	$\tilde{\tau}_1$	$\tilde{g}$MSB	$\tilde{e}_1$ and $\tilde{\mu}_1$ co-LSP and also SMP when stau mixing small.
$\tilde{\chi}_1^+$	$\tilde{\chi}_1^0$	MSSM	$m_{\tilde{\chi}_1^+} - m_{\tilde{\chi}_1^0} \lesssim m_{\pi^+}$. Very large $M_{1,2} \gtrsim 2$ TeV $\gg \lvert\mu\rvert$ (Higgsino region) or non-universal gaugino masses $M_1 \gtrsim 4M_2$, with the latter condition relaxed to $M_1 \gtrsim M_2$ for $M_2 \ll \lvert\mu\rvert$. Natural in O-II models, where simultaneously also the $\tilde{g}$ can be long-lived near $\delta_{GS} = -3$.
		AMSB	$M_1 > M_2$ natural. m_0 not too small. See MSSM above.
$\tilde{g}$	$\tilde{\chi}_1^0$	MSSM	Very large $m^2_{\tilde{q}} \gg M_3$, e.g. split SUSY.
	$\tilde{G}$	GMSB	SUSY GUT extensions [25–27].
	$\tilde{g}$	MSSM	Very small $M_3 \ll M_{1,2}$, O-II models near $\delta_{GS} = -3$.
		GMSB	SUSY GUT extensions [25–29].
$\tilde{t}_1$	$\tilde{\chi}_1^0$	MSSM	Non-universal squark and gaugino masses. Small $m^2_{\tilde{q}}$ and M_3, small $\tan\beta$, large A_t.
$\tilde{b}_1$			Small $m^2_{\tilde{q}}$ and M_3, large $\tan\beta$ and/or large $A_b \gg A_t$.

EXOTIC

Q_{em}	C_{QCD}	S	Model(s)
0	**8**	1	Universal Extra Dimensions (KK gluon)
± 1	**1**	$\frac{1}{2}$	Universal Extra Dimensions (KK lepton)
			Fat Higgs with a fat top (ψ fermions)
			4th generation (chiral) fermions
			Mirror and/or vector-like fermions
		0	Fat Higgs with a fat top (ψ scalars)
$\pm\frac{4}{3}$	**3**	$\frac{1}{2}$	Warped Extra Dimensions with GUT parity (XY gaugino)
		0	5D Dynamical SUSY-breaking (xyon)
$-\frac{1}{3}, \frac{2}{3}$	**3**	$\frac{1}{2}$	Universal Extra Dimensions (KK down, KK up)
			4th generation (chiral) fermions
			Mirror and/or vector-like fermions
			Warped Extra Dimensions with GUT parity (XY gaugino)
$\epsilon < 1$	**1**	$\frac{1}{2}$	GUT with $U(1) - U(1)'$ mixing
			Extra singlets with hypercharge $Y = 2\epsilon$
			Millicharged neutrinos
?	?	$0/\frac{1}{2}/1$	"Technibaryons"

+++ other more exotic models/particles (monopoles, quirks, dyons, etc.)

arXiv:hep-ph/0611040 **Fairbairn et al.**

Loic.Quertenmont@cern.ch

What are we talking about ?

A rich phenomenology, dictating the experimental signature

- **Heavy**
- **Stable**
- **Charged**

Loic.Quertenmont@cern.ch

What are we talking about ?

A rich phenomenology, dictating the experimental signature

- **Heavy**
  Slow particle → $\beta<1$

- **Stable**

- **Charged**

Loic.Quertenmont@cern.ch

What are we talking about ?

A rich phenomenology, dictating the experimental signature

- **Heavy**
  Slow particle → $\beta<1$

- **Stable → Long-lived**
  1) Reach the tracker → $c\tau > O(0.1)m$
  2) Escape the detector → $c\tau > O(10)m$
  3) Stop in → Asynchronous decay → $c\tau > O(100)m$

- **Charged**

Loic.Quertenmont@cern.ch

What are we talking about ?

A rich phenomenology, dictating the experimental signature

- **Heavy**
  Slow particle → $\beta<1$

- **Stable → Long-lived**
  1) Reach the tracker → $c\tau > O(0.1)$m
  2) Escape the detector → $c\tau > O(10)$m
  3) Stop in → Asynchronous decay → $c\tau > O(100)$m

- **Charged**
  Electric → lepton-like
  $|Q|<<e$, $|Q|<e$, $|Q|=e$, $|Q|>e$, $|Q|>>e$
  Color → hadron-like → R-hadron properties ?!
  (gluinoball, charge flip, interaction w/ matter, etc.)
  Magnetic → monopoles, dyons
  Exotic → quirks, …

Loic.Quertenmont@cern.ch

What are we talking about ?

A rich phenomenology, dictating the experimental signature

- **Heavy**
  Slow particle → $\beta<1$

- **Stable → Long-lived**
  1) Reach the tracker → $c\tau > O(0.1)$m
  2) Escape the detector → $c\tau > O(10)$m
  3) Stop in → Asynchronous decay → $c\tau > O(100)$m

- **Charged**

IONIZATION

Electric → lepton-like
$|Q|<<e$, $|Q|<e$, $|Q|=e$, $|Q|>e$, $|Q|>>e$

Color → hadron-like → R-hadron properties ?!
(gluinoball, charge flip, interaction w/ matter, etc.)

Magnetic → monopoles, dyons

Exotic → quirks, …

Terminology : HSCP=SMP=ChaMP=CmLLP=…

Loic.Quertenmont@cern.ch

Experimental Signature

IONIZING

dE/dx

$$\frac{dE}{dx} \approx Q^2\left(\frac{A}{\beta^2} + B\right) \text{ for } \beta<<1$$

Magnetic charge g_D → Q ~ 68.5e

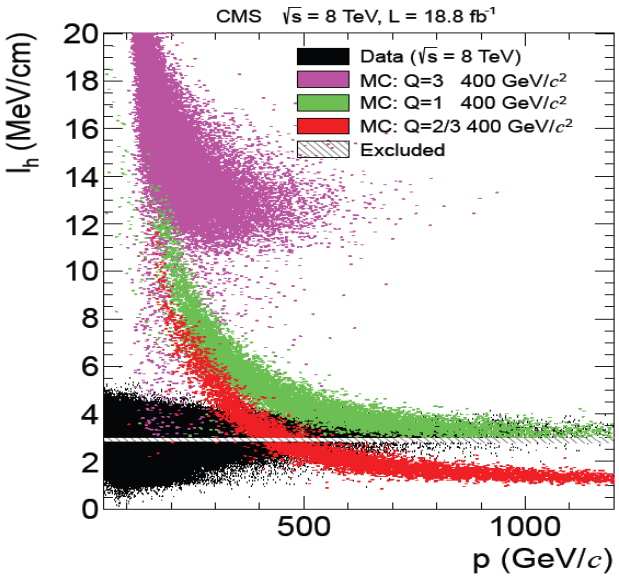

dE/dx resolution improves with #layers, sensor thickness and readout

SLOW

Time Of Flight

$$1/\beta = 1 + \frac{c\delta_t}{L}$$ with δ_t = delay

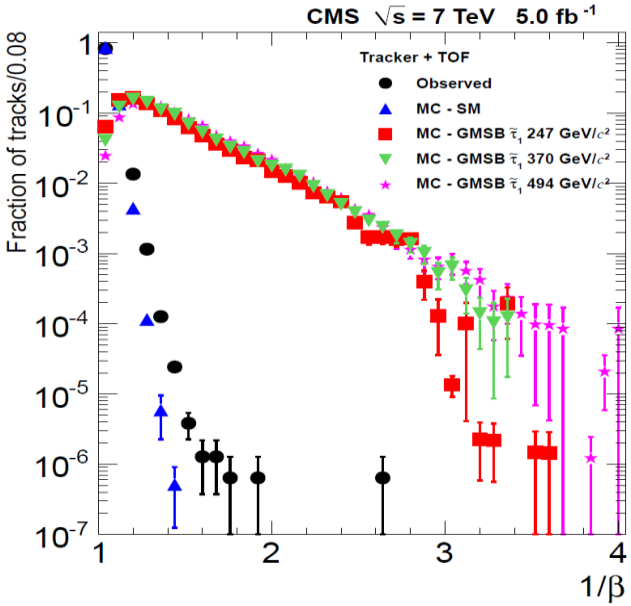

β resolution improves with time resolution (δt) and with lever arm (L)

Loic.Quertenmont@cern.ch

Experimental Signature

IONIZING → **dE/dx**

$$\frac{dE}{dx} \approx Q^2\left(\frac{A}{\beta^2} + B\right) \text{ for } \beta<<1$$

Magnetic charge g_D → Q ~ 68.5e

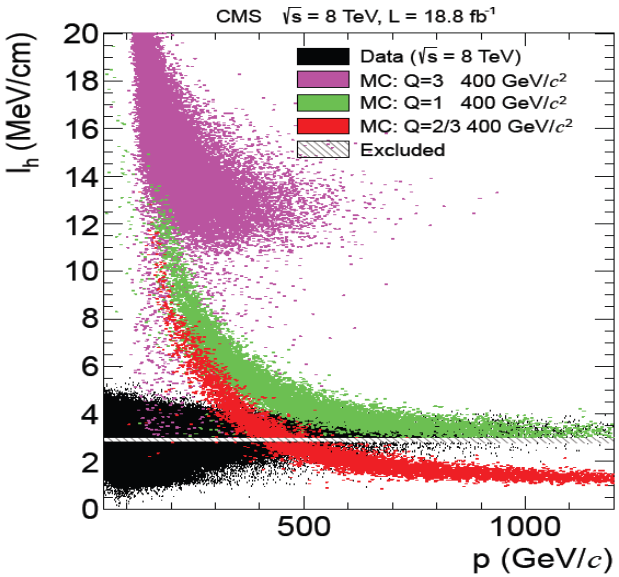

dE/dx resolution improves with #layers, sensor thickness and readout

STOPPED

Decay asynchronously w.r.t LHC bunch

If dE/dx is (high) comparable to the kinetic energy
The particle may stop in the detector and decay later

SLOW → **Time Of Flight**

$$1/\beta = 1 + \frac{c\delta_t}{L}$$ with δ_t = delay

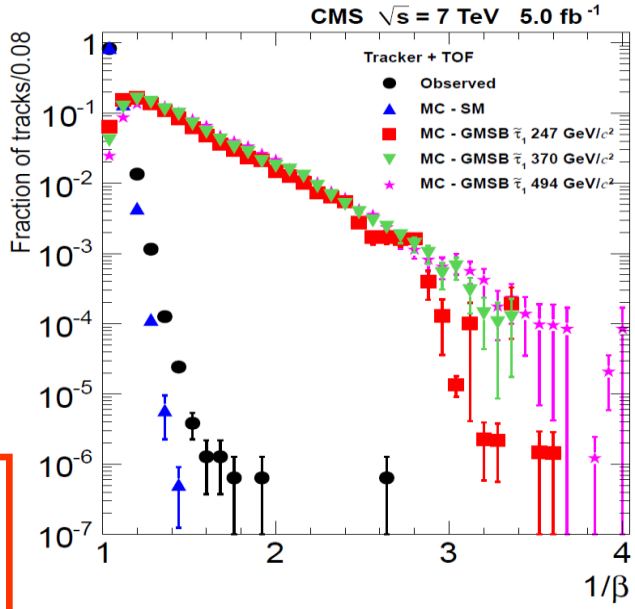

β resolution improves with time resolution (δt) and with lever arm (L)

Loic.Quertenmont@cern.ch

ATLAS/CMS Detectors for HSCP

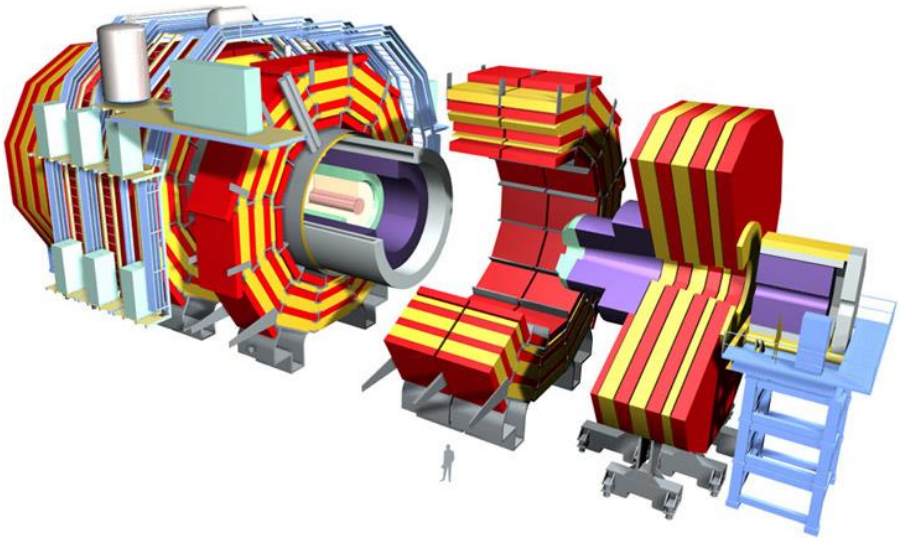

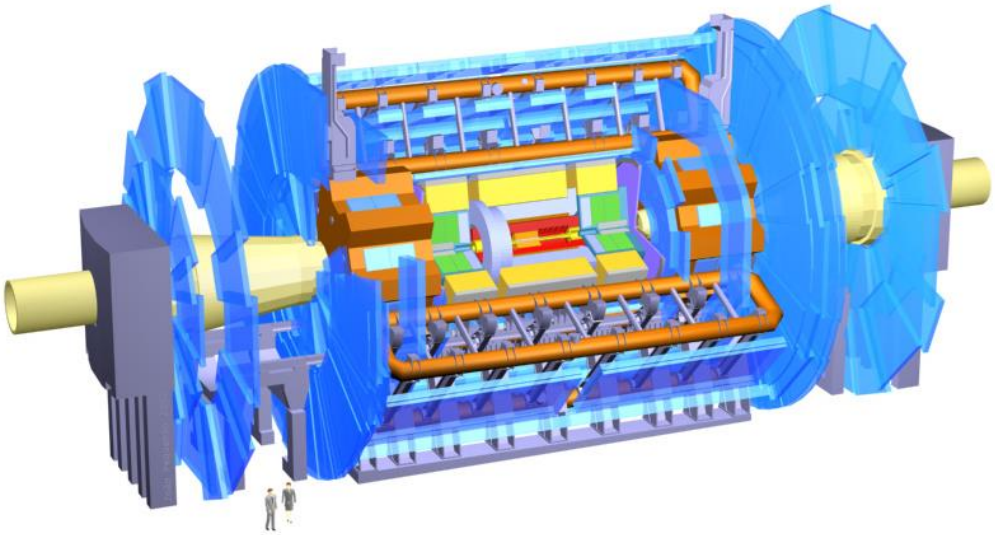

Loic.Quertenmont@cern.ch

ATLAS/CMS Detectors for HSCP

Time of Flight

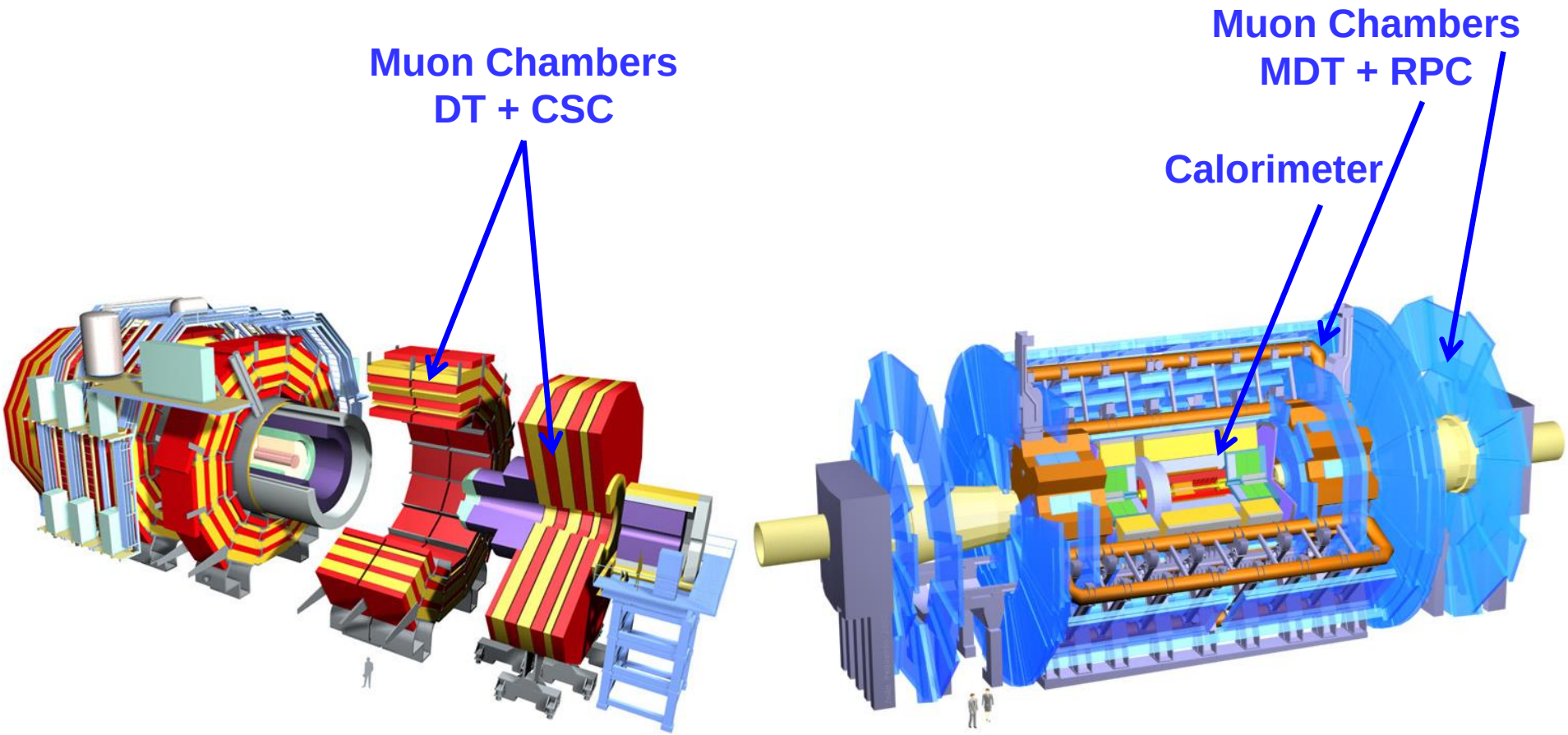

ATLAS/CMS Detectors for HSCP

dE/dx

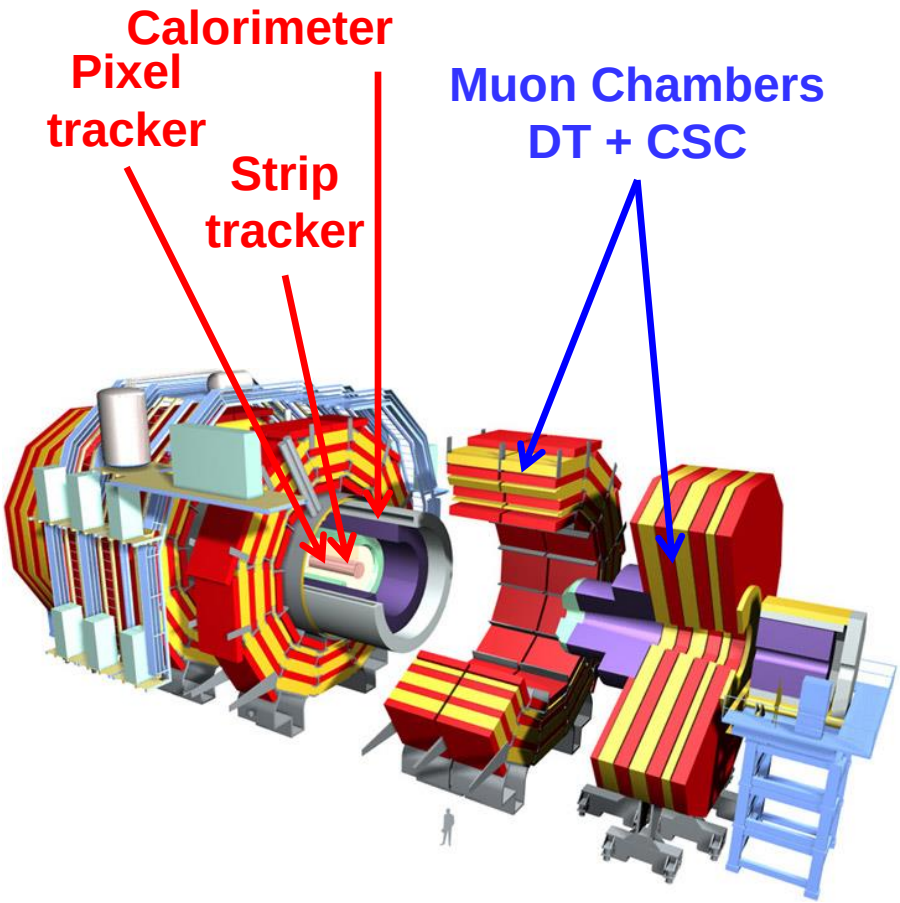

Time of Flight

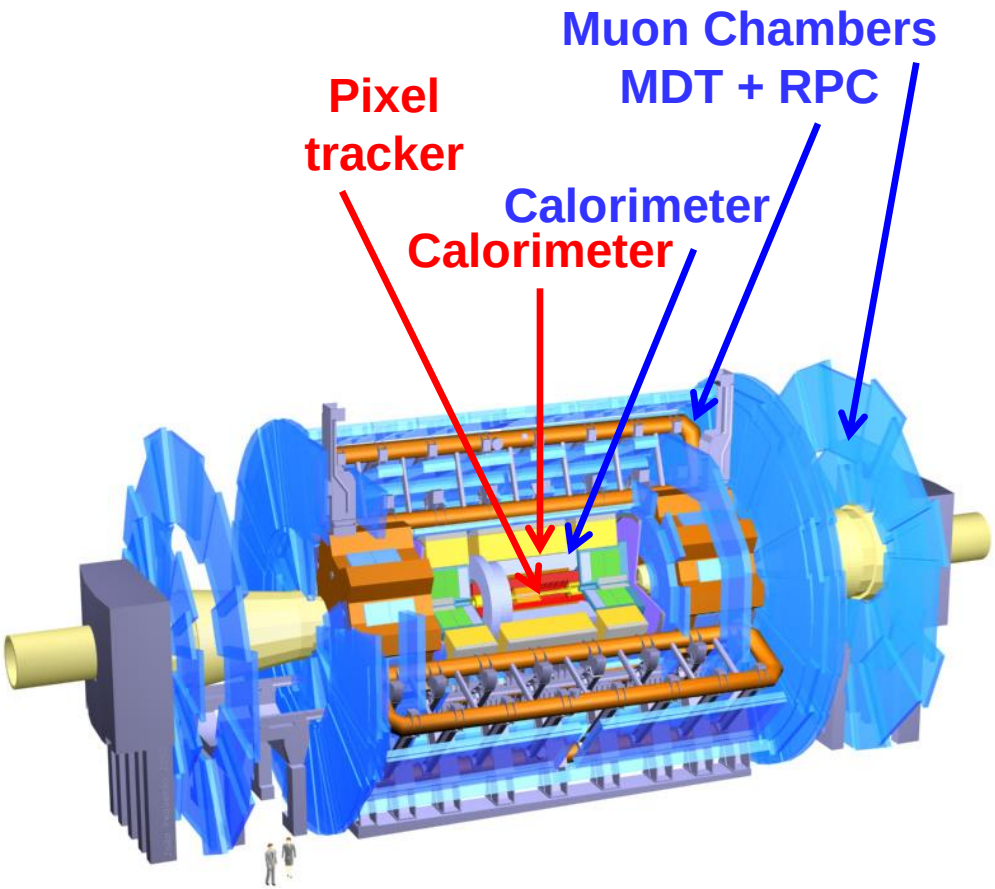

ATLAS/CMS Detectors for HSCP

dE/dx

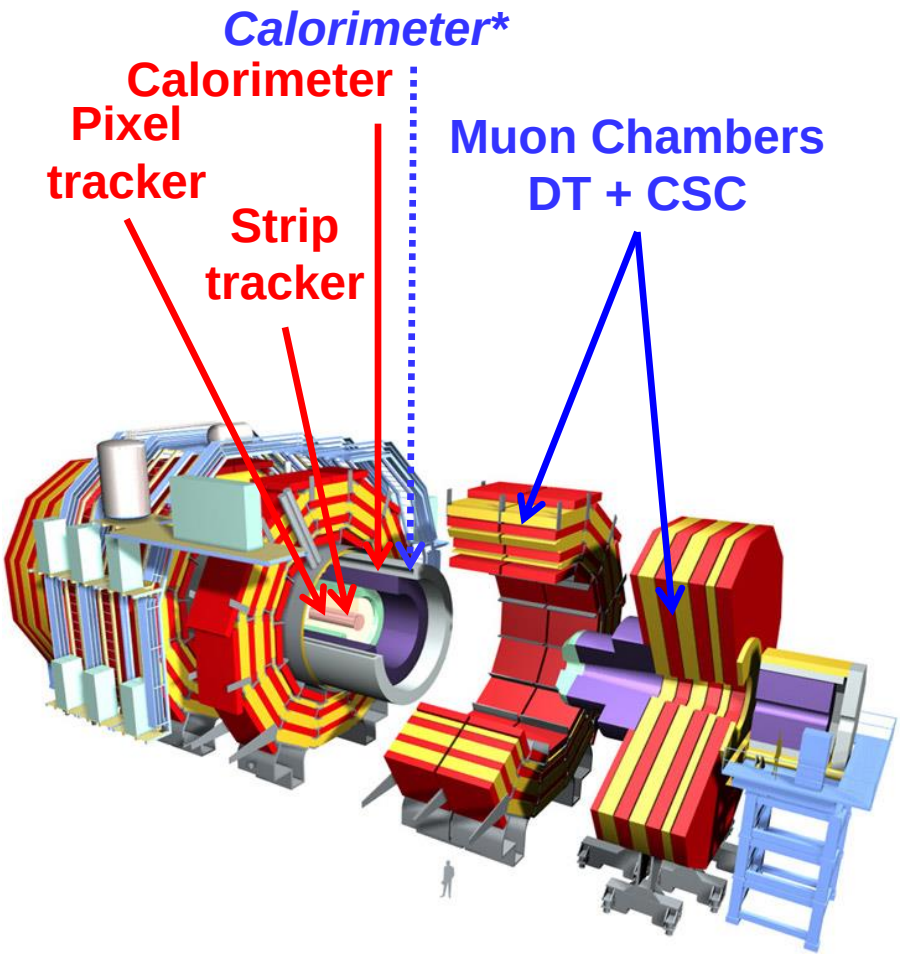

* = only if dEdx>> O(1) GeV

Time of Flight

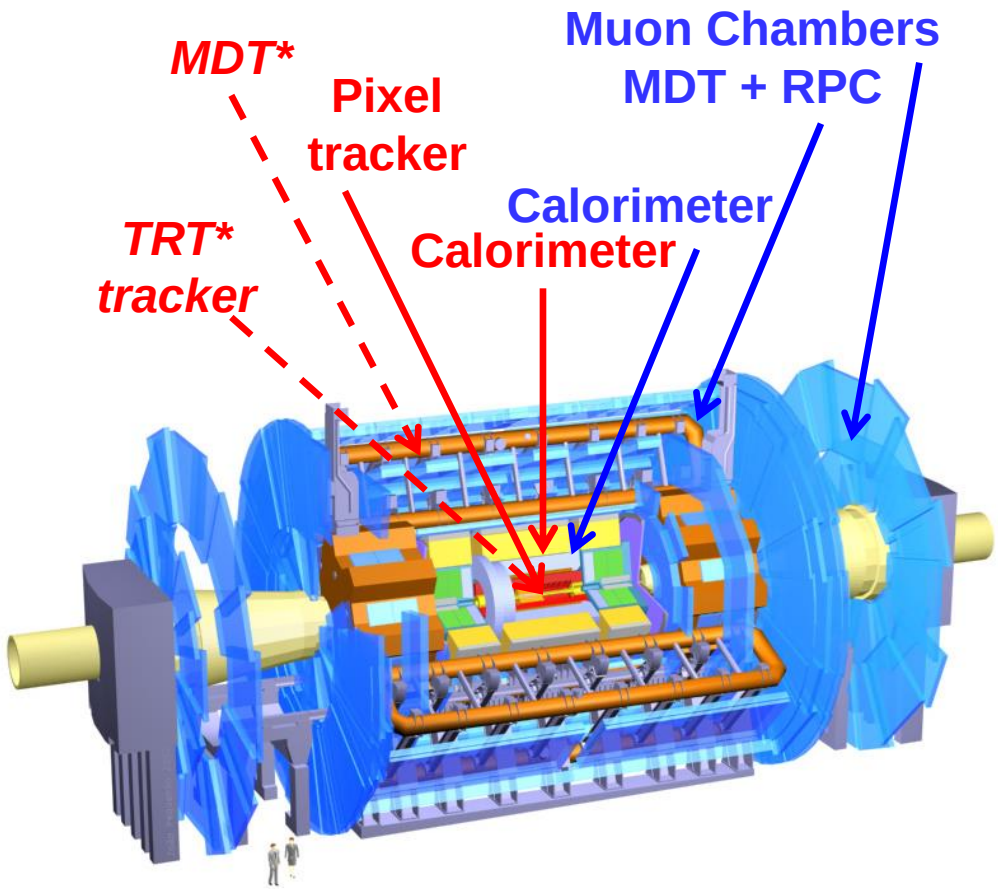

* = only in special stream

ATLAS/CMS Detectors for HSCP

- R-Hadron charge can flip due to nuclear interaction
- Many possible R-Hadron interaction models
  → some predicts that flipping to neutral is more likely
- Gluino ball fraction (f) is also unknown (even if 10% in pythia)

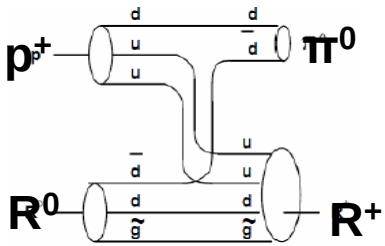

Stay charge all along

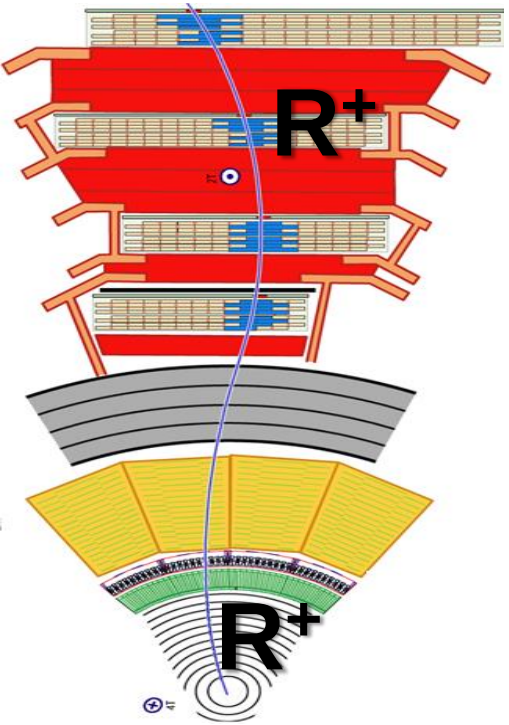

Charged in tracker only

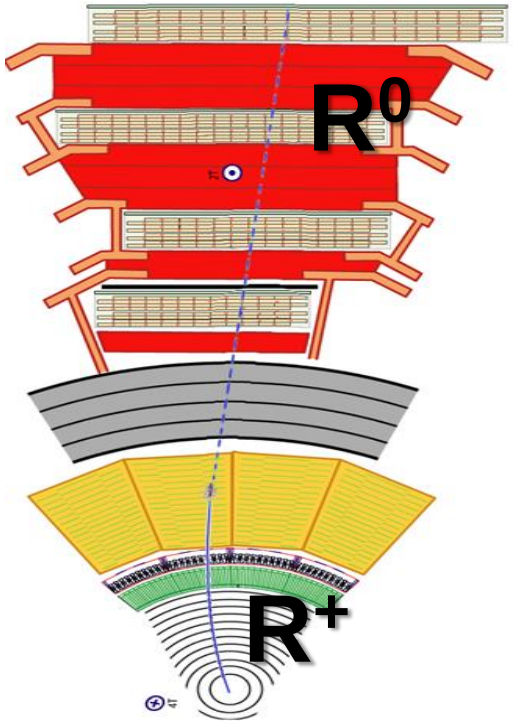

Charged in muon syst. only

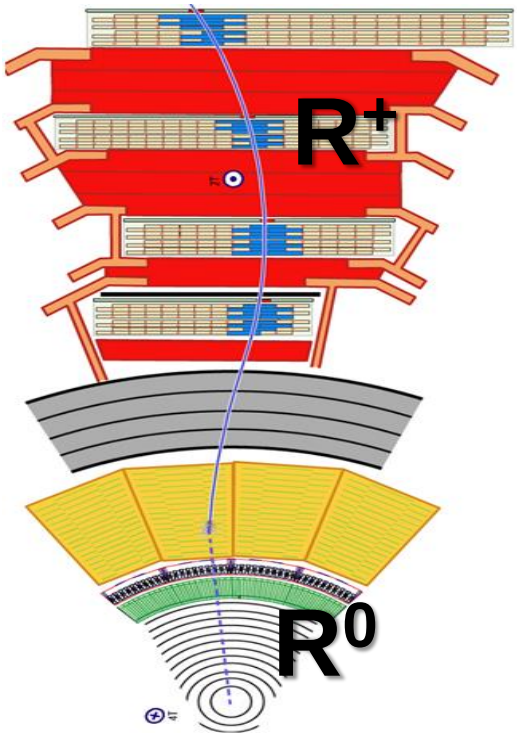

ATLAS/CMS Searches

*= apply to $g_D \neq 0$

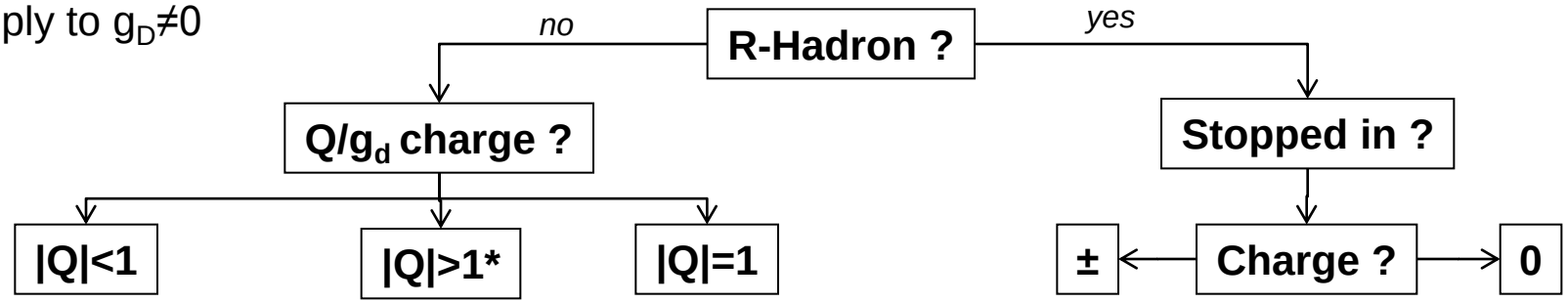

ATLAS/CMS Searches

*= apply to $g_D \neq 0$

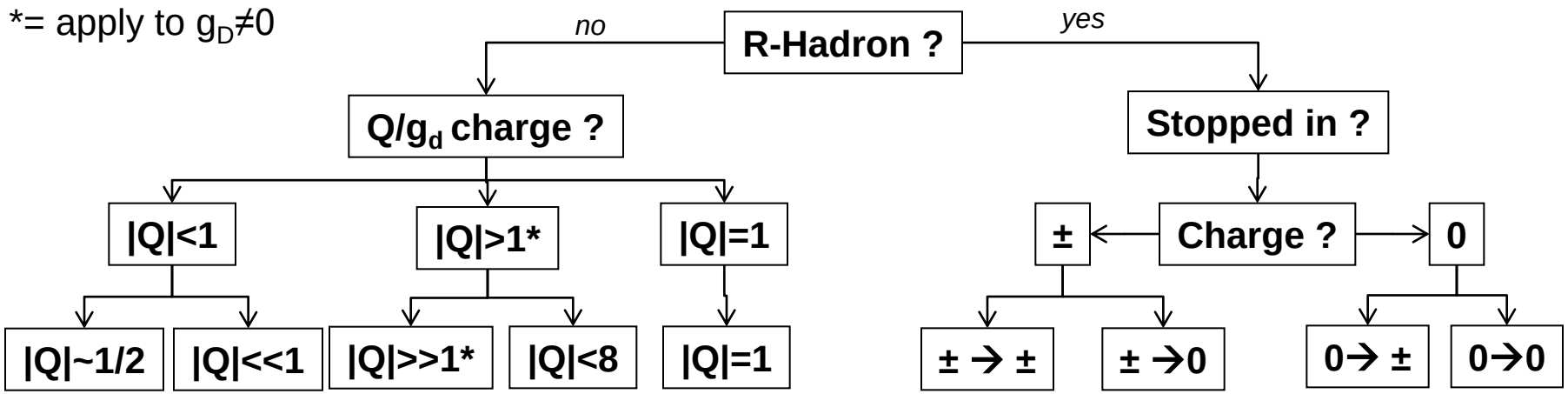

Loic.Quertenmont@cern.ch

ATLAS/CMS Searches

*= apply to $g_D \neq 0$

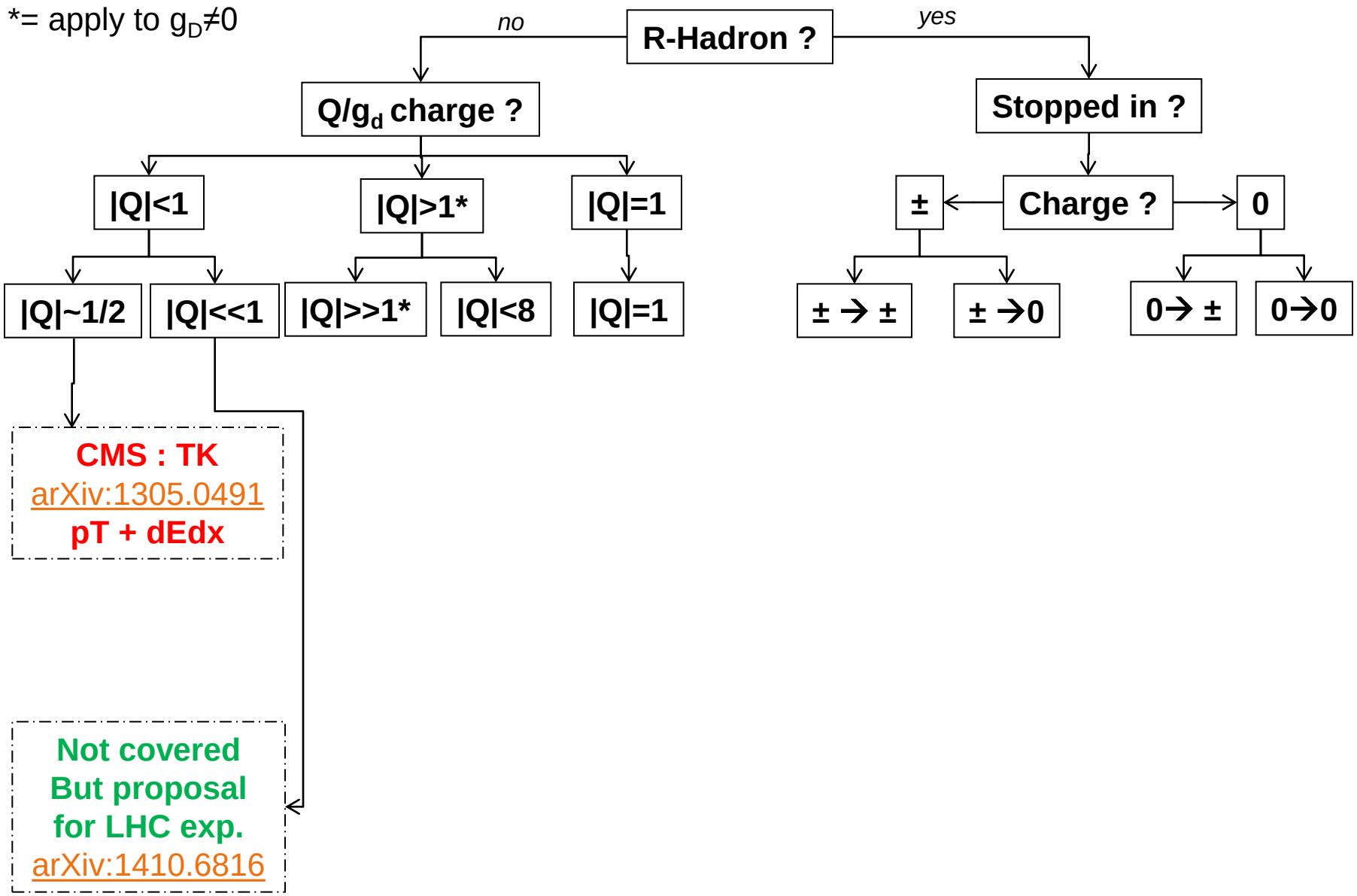

Loic.Quertenmont@cern.ch

Selected Results on: Q<1

The search in a nutshell

- Challenges:
  - Small energy loss → LHC detectors and DAQ designed for Q=1
  - Out-of-time particles (cosmics/ghost) also lead to low dE/dx
- Advantage:
  - Tracking: high reco pT (=pT_{True} / Q)

signature

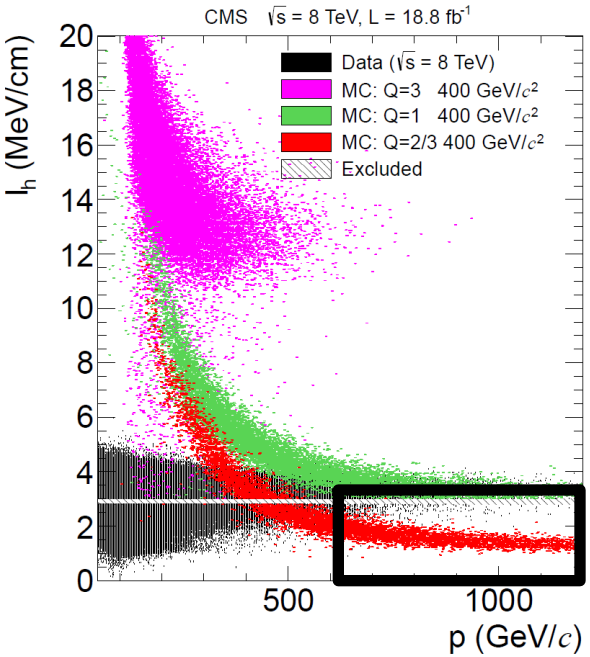

Background (ABCD)

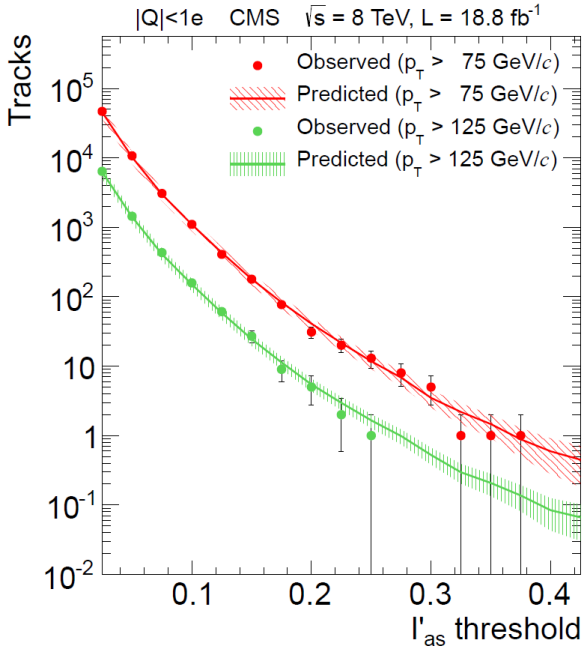

Limits

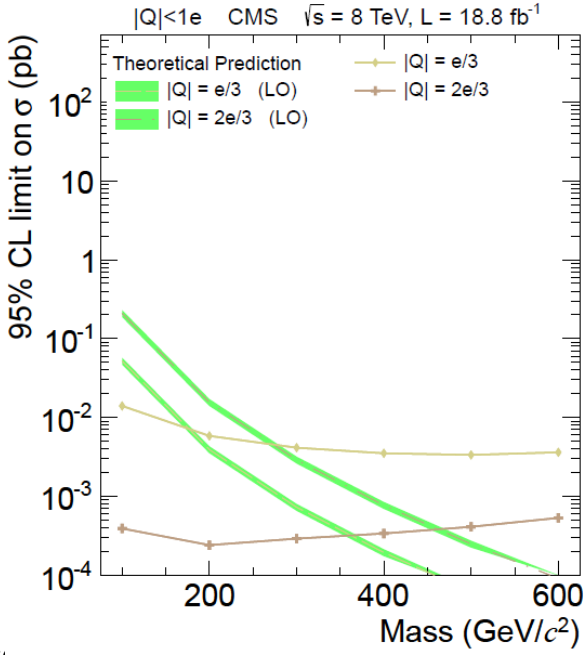

ATLAS/CMS Searches

*= apply to $g_D \neq 0$

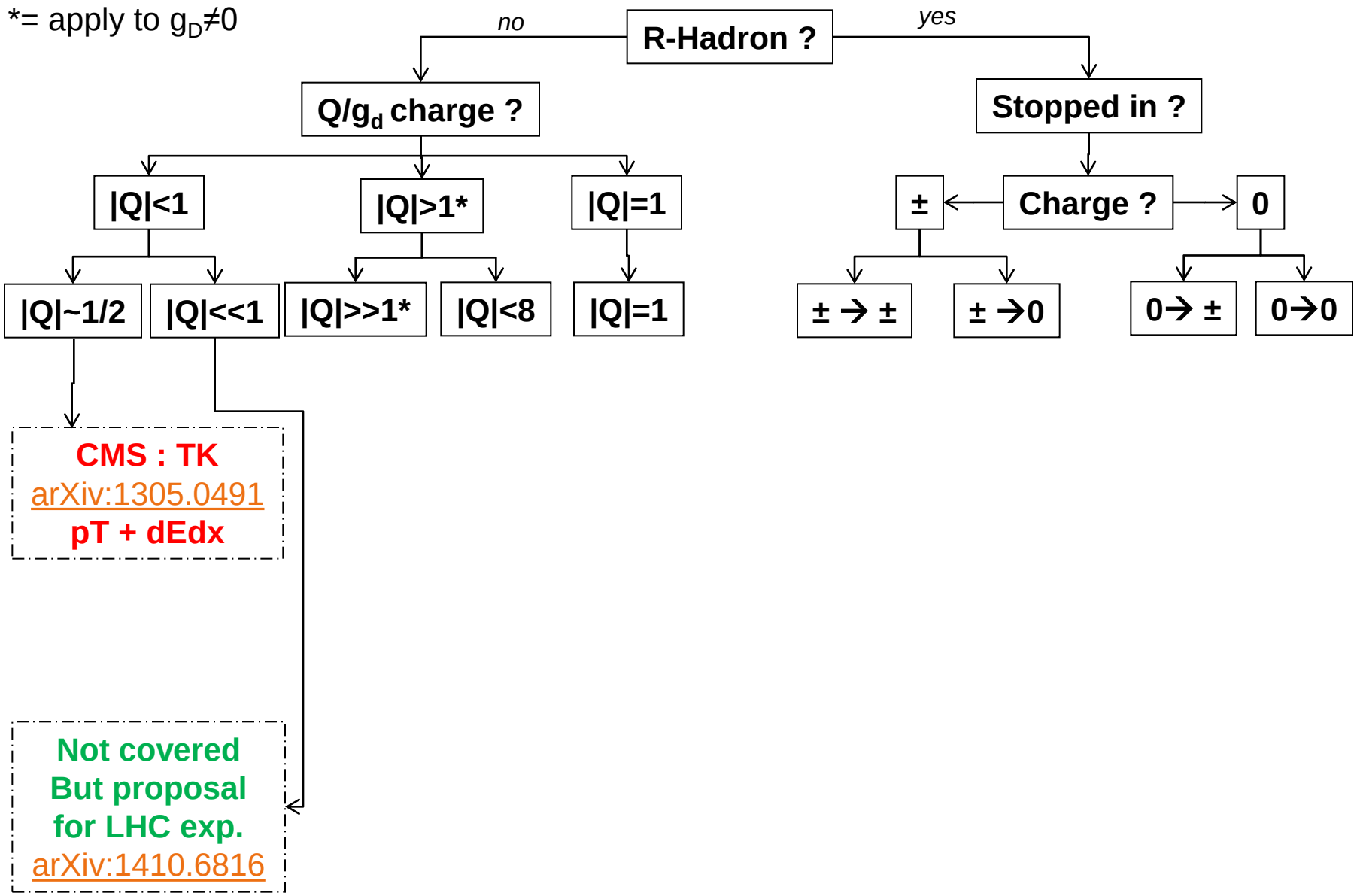

Loic.Quertenmont@cern.ch

ATLAS/CMS Searches

*= apply to $g_D \neq 0$

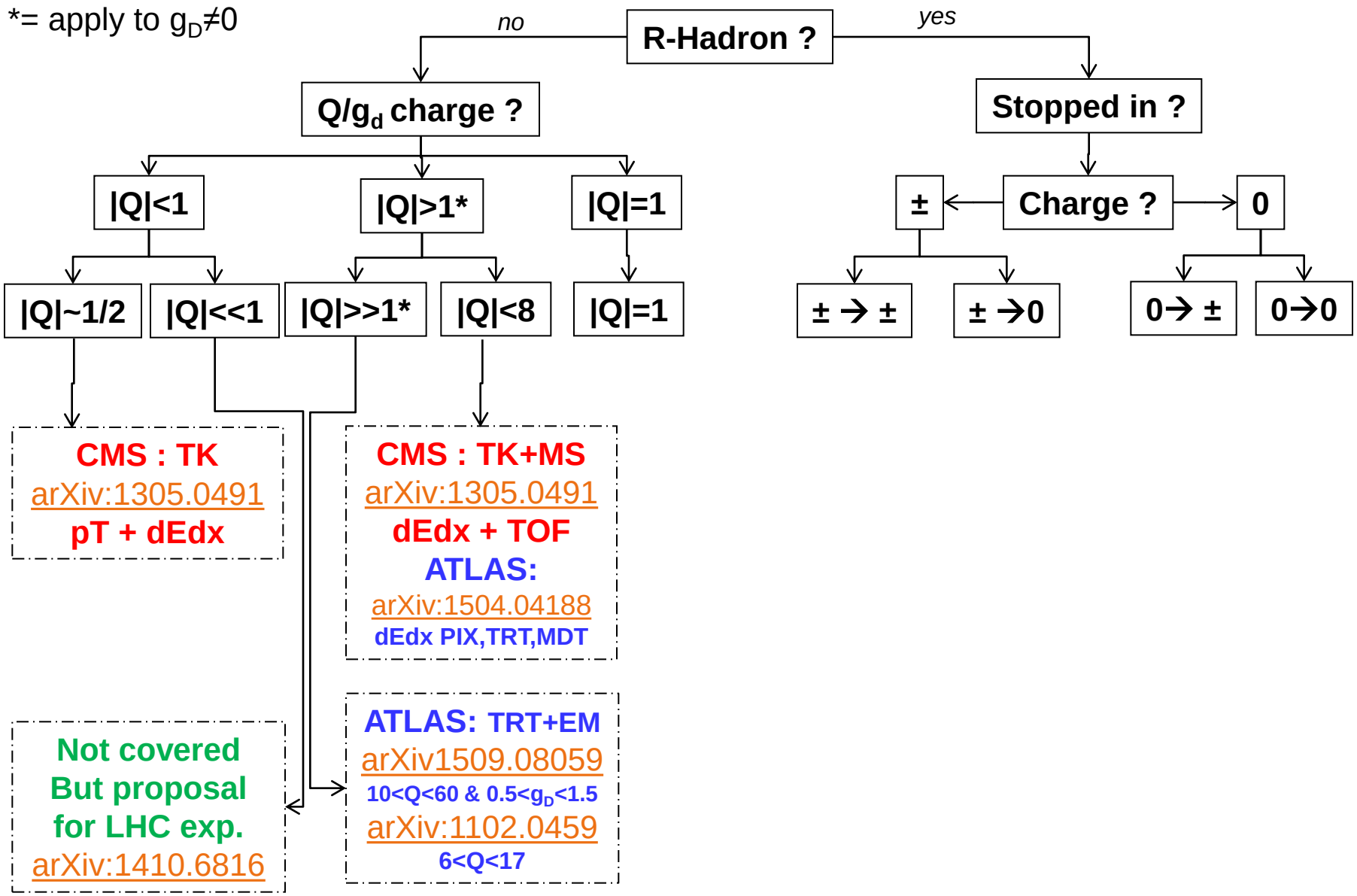

Loic.Quertenmont@cern.ch

Selected Results on: 1<Q<10

The search in a nutshell

- Challenges:
  - Tracking: smaller reco pT (=pT_{True} / Q)→ trigger & background rate
- Solutions:
  - Requires it to reach MS (many redundant measurements dE/dx or TOF)
  - Keep track pT threshold as low as possible (40GeV)

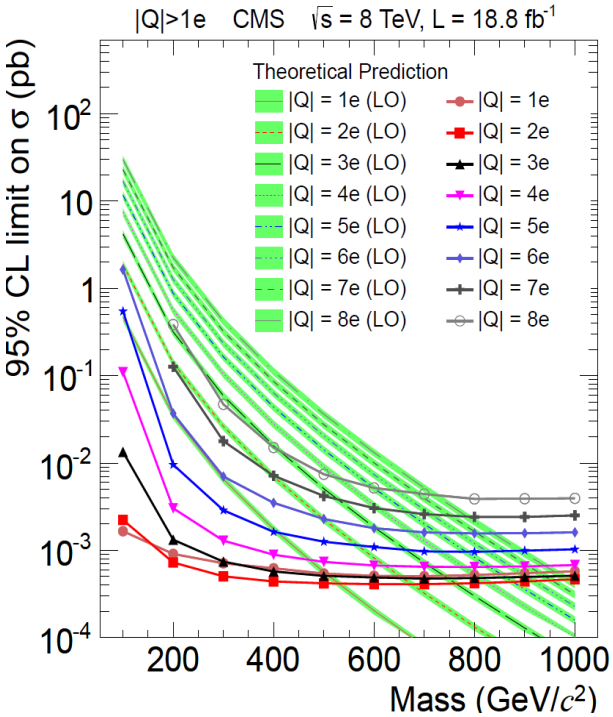

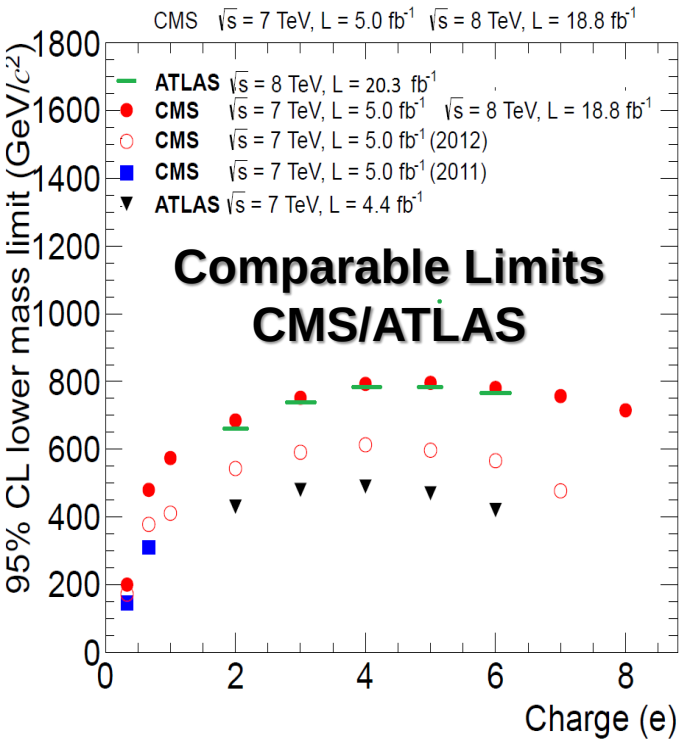

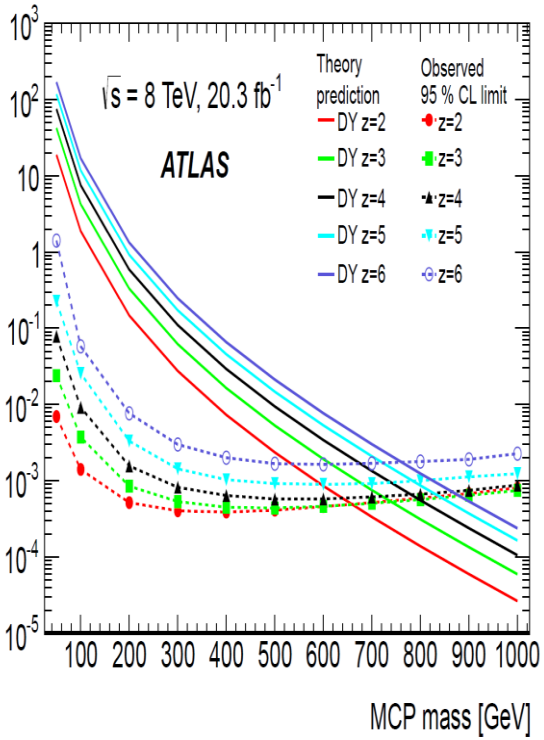

Loic.Quertenmont@cern.ch

Selected Results on: Q>>1 or $g_D \neq 0$

The search in a nutshell

- Challenges:
  - Tracking: small reco pT (=pT_{True} / Q) or track bending for $g_D \neq 0$
  - Huge energy loss: not reach outer detector (+ possible DAQ issues)
- Solutions: Dedicated trigger + no tracking + only inner detectors (TRT and EM)

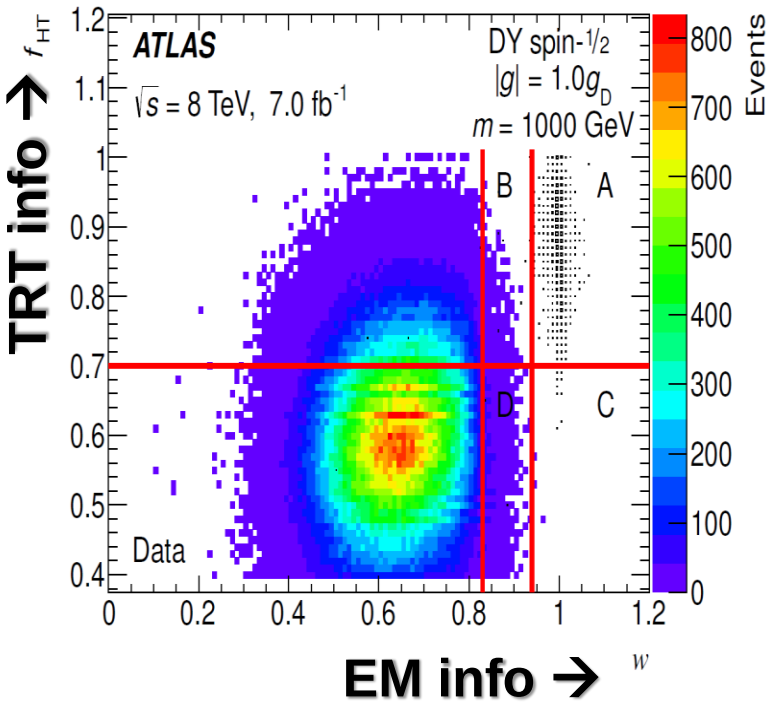

	Drell-Yan Lower Mass Limits [GeV]						
	$\lvert g\rvert = 0.5g_D$	$\lvert g\rvert = 1.0g_D$	$\lvert g\rvert = 1.5g_D$	$\lvert z\rvert = 10$	$\lvert z\rvert = 20$	$\lvert z\rvert = 40$	$\lvert z\rvert = 60$
spin-1/2	1180	1340	1210	780	1050	1160	1070
spin-0	890	1050	970	490	780	920	880

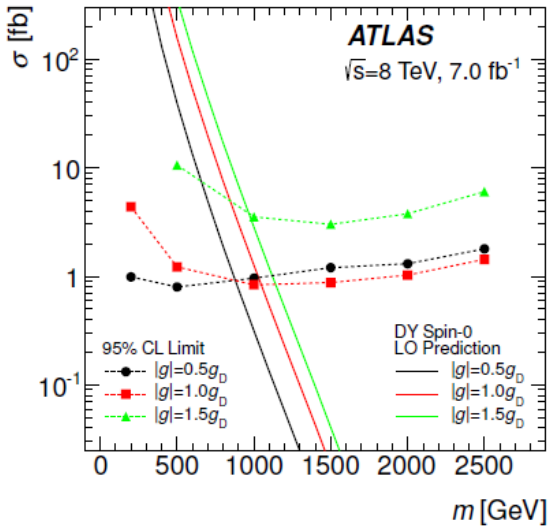

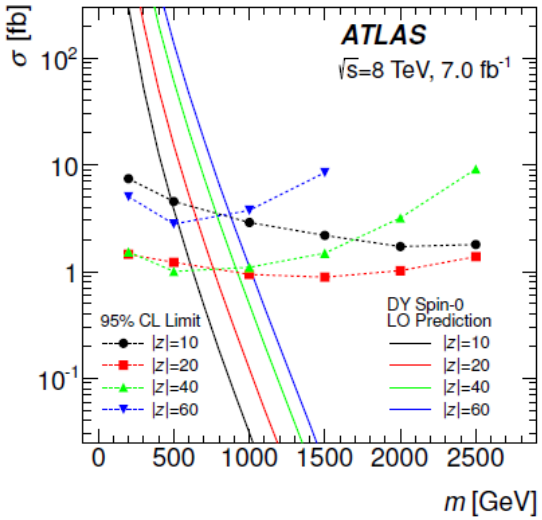

Loic.Quertenmont@cern.ch

ATLAS/CMS Searches

*= apply to $g_D \neq 0$

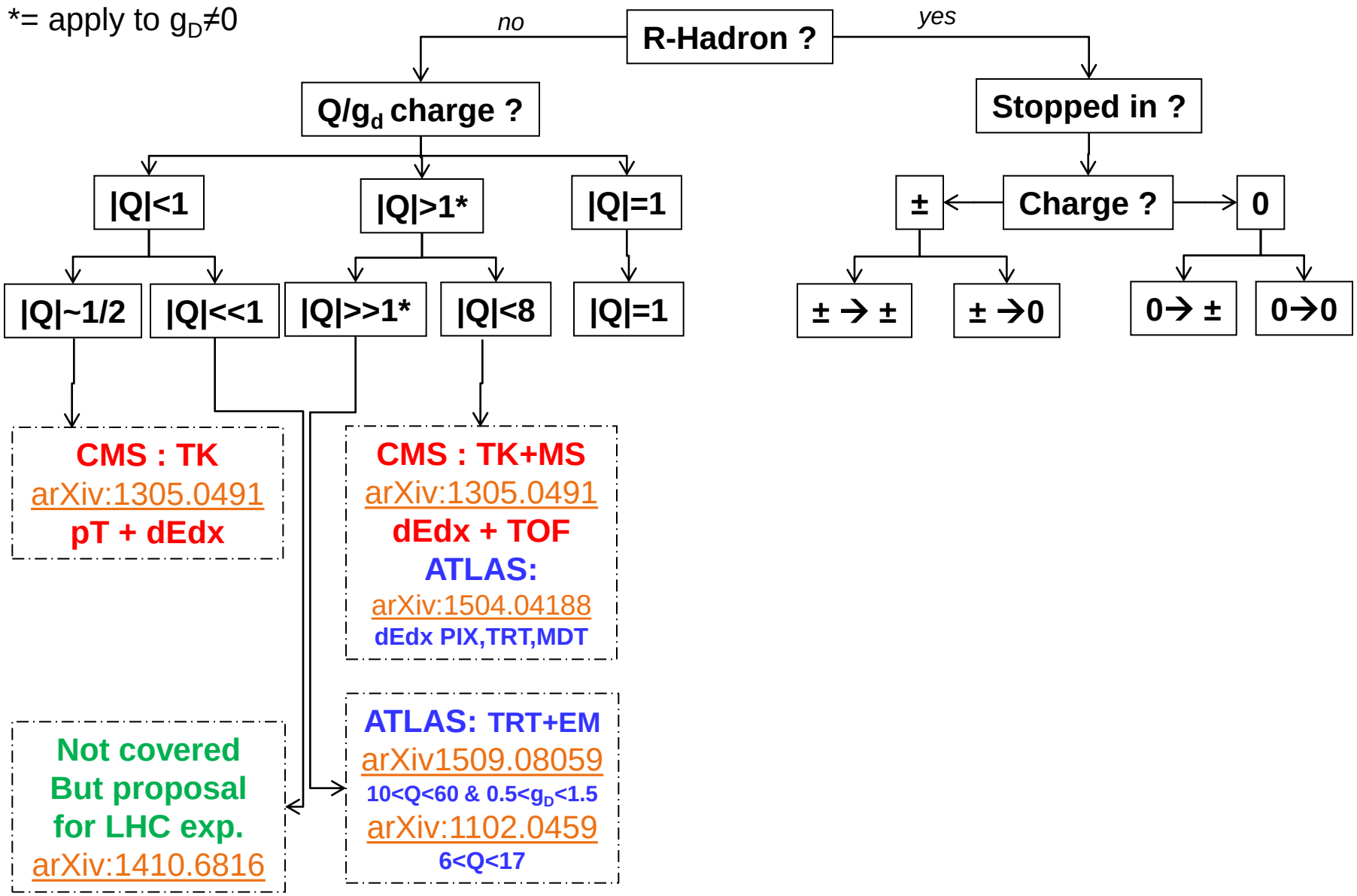

Loic.Quertenmont@cern.ch

ATLAS/CMS Searches

*= apply to $g_D \neq 0$

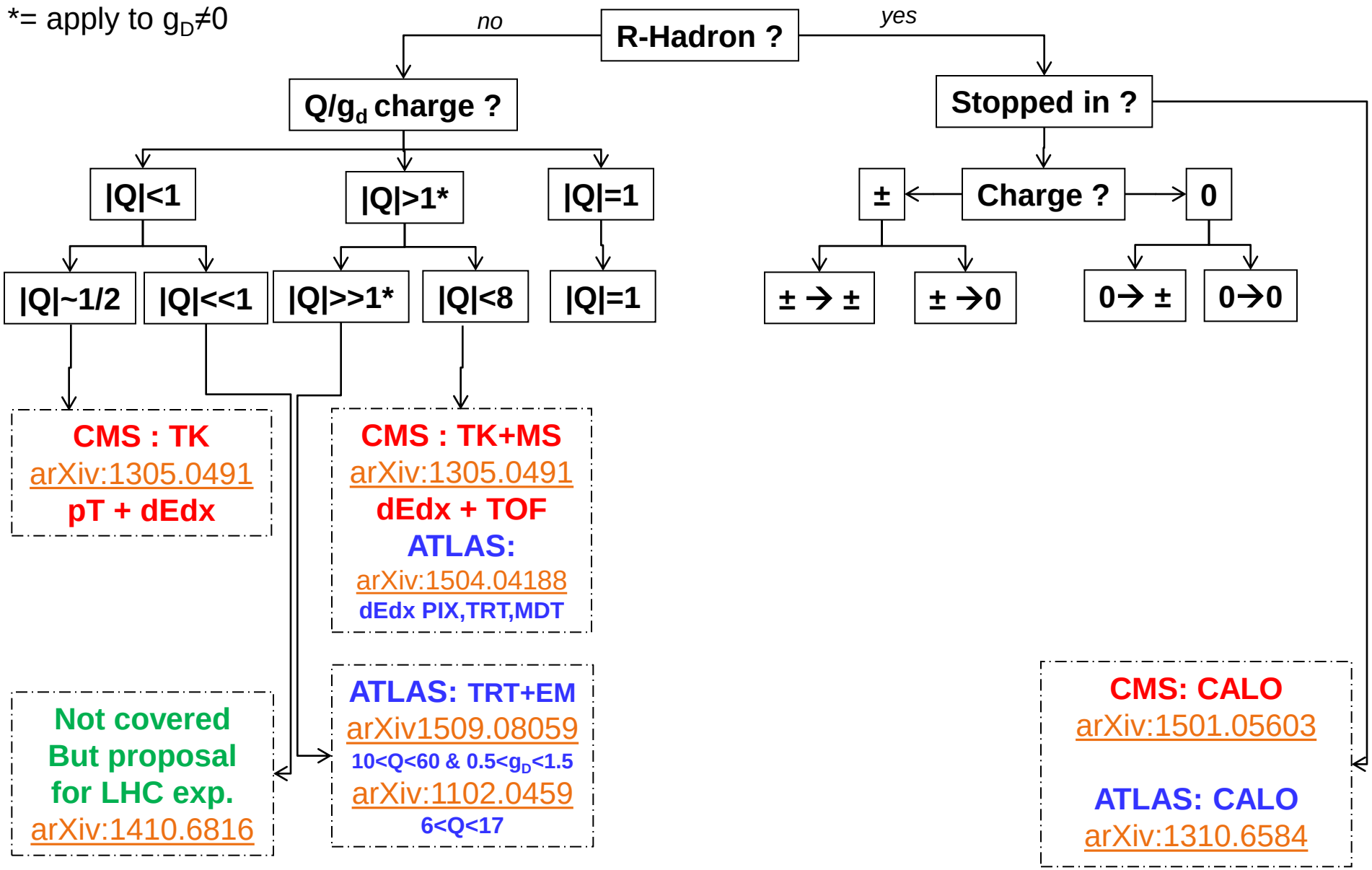

Loic.Quertenmont@cern.ch

Selected Results on: **Stopped HSCP**

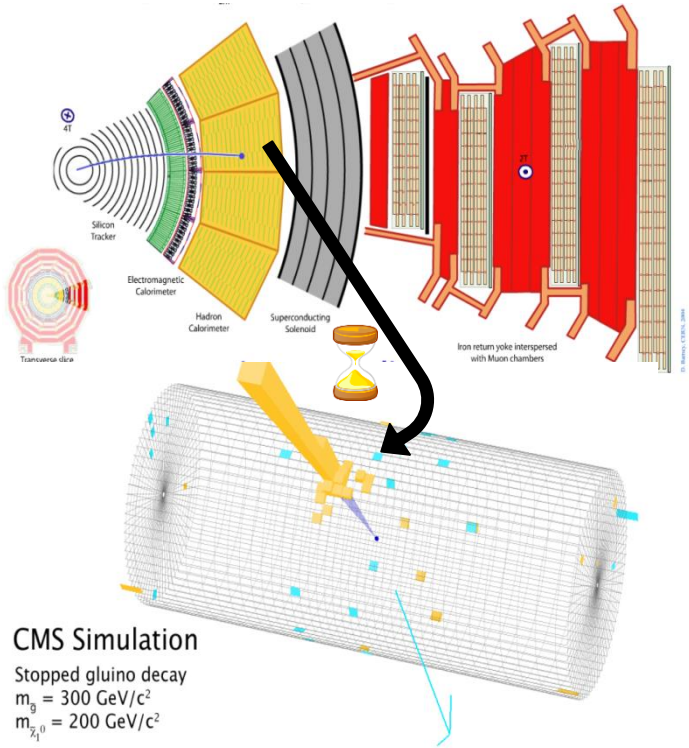

The search in a nutshell

- Signature: Energetic jet w/o pp collisions
- Backgrounds: cosmics, beam halo, det. noise

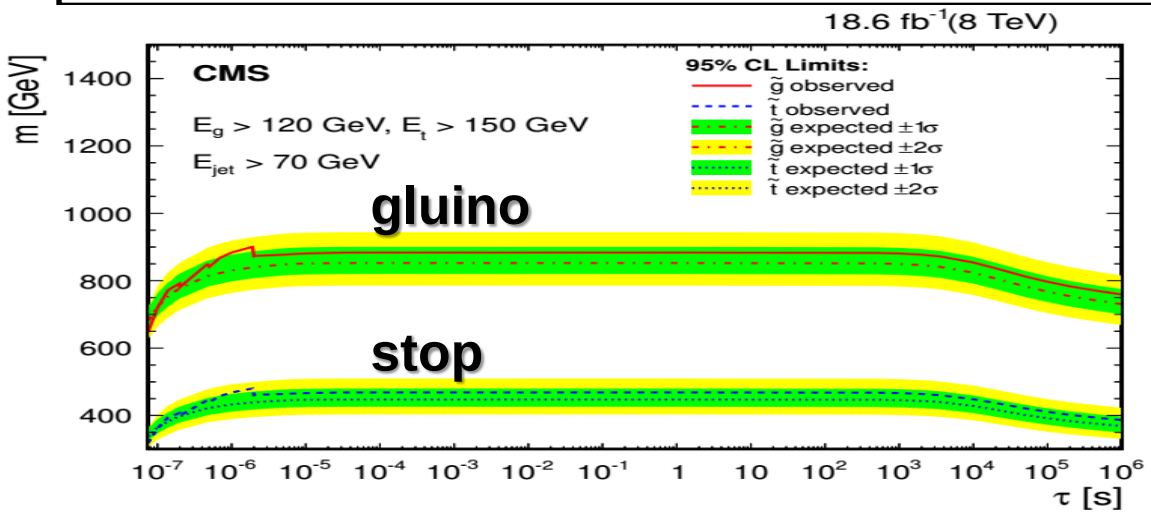

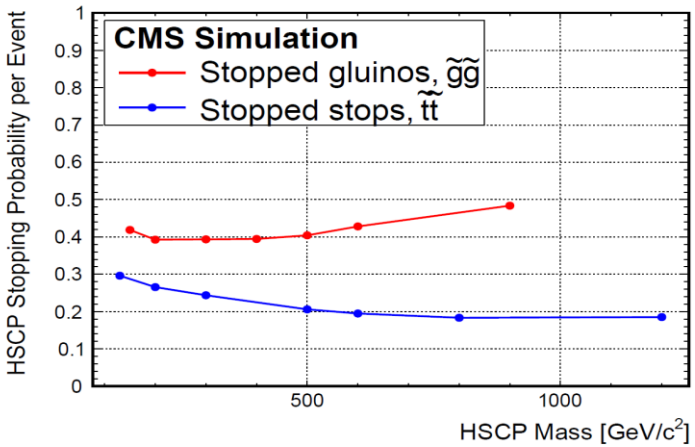

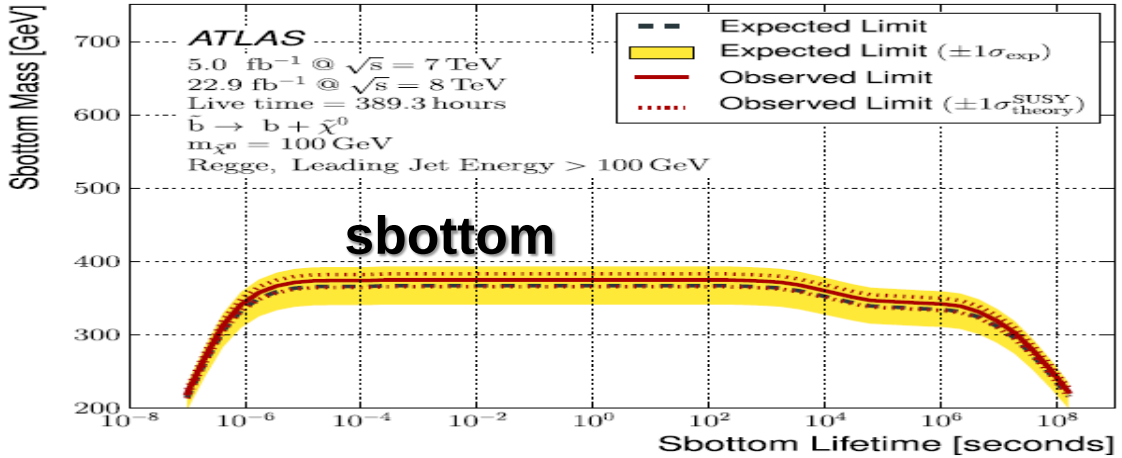

Loic.Quertenmont@cern.ch

ATLAS/CMS Searches

*= apply to $g_D \neq 0$

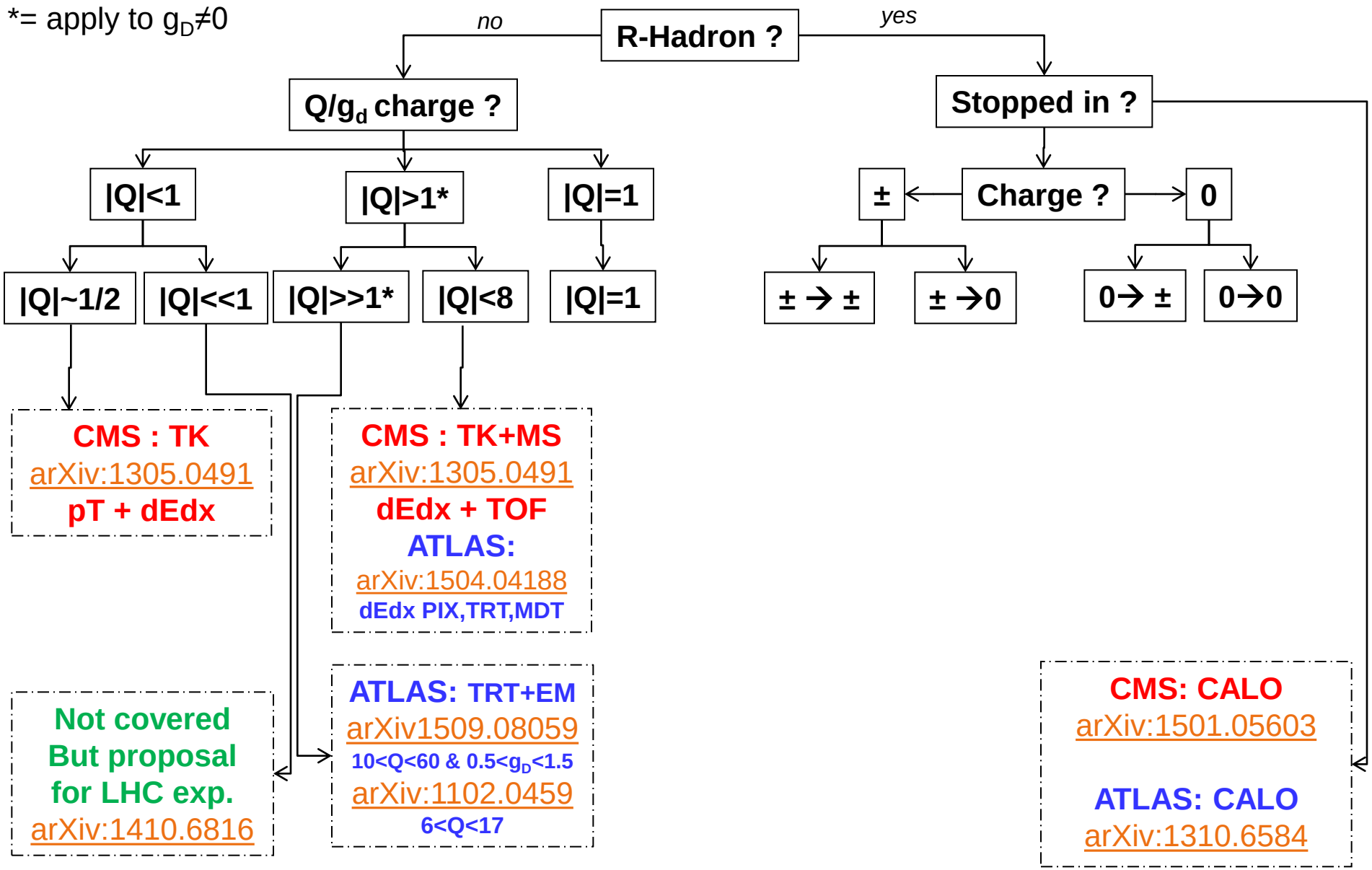

Loic.Quertenmont@cern.ch

ATLAS/CMS Searches

*= apply to $g_D \neq 0$

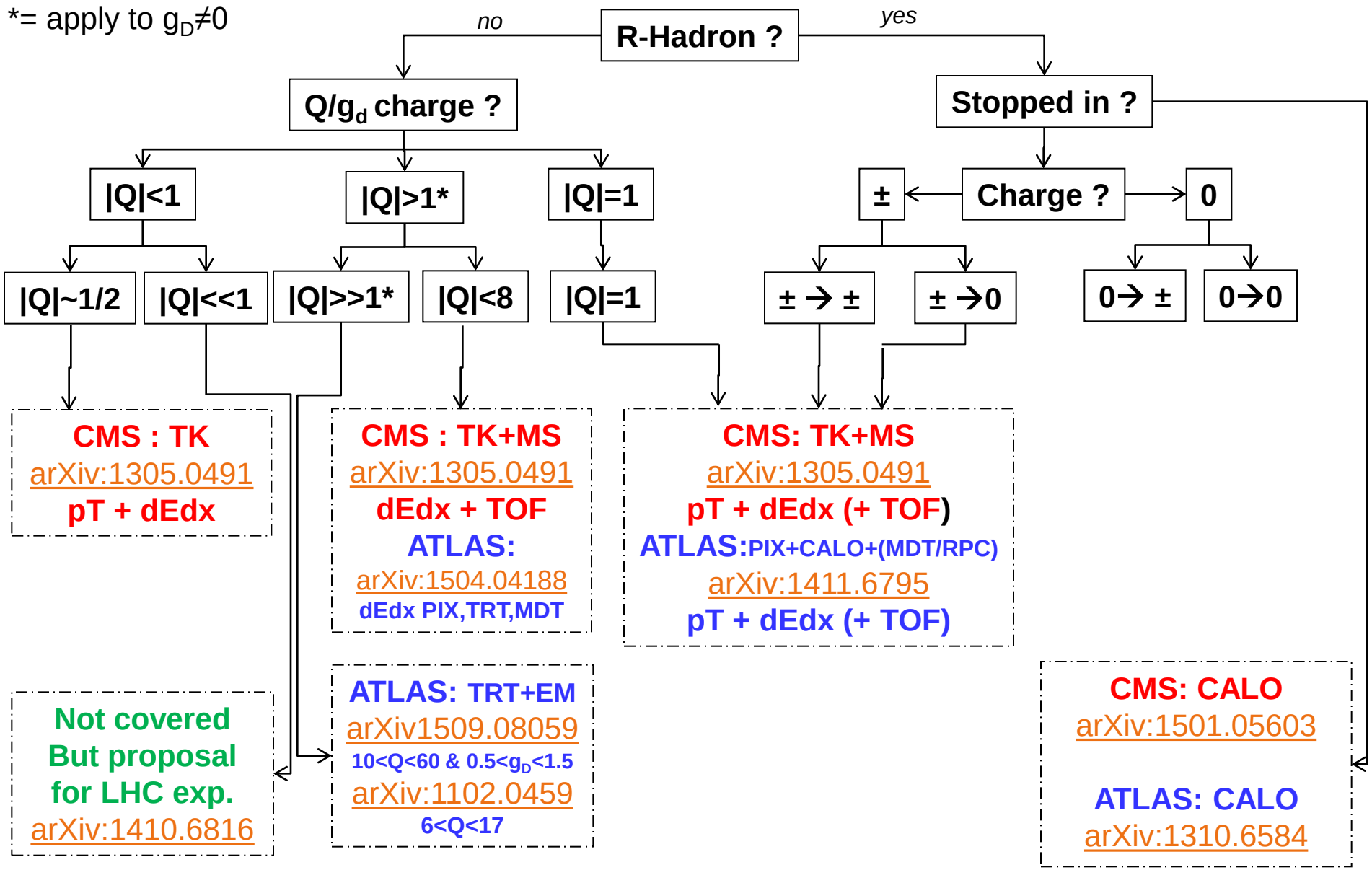

Loic.Quertenmont@cern.ch

Selected Results: **Regular (±→±) HSCP**

- Very similar approached used by ATLAS and CMS
- Trigger : Muon OR MET
- Variables: pT (tracker), dE/dx (inner detector) and TOF (Muon System)
- Background prediction based on ABCD and predicted mass sprectrum from pdf
- Main difference: ATLAS has a 2 HSCP/event category not considered by CMS

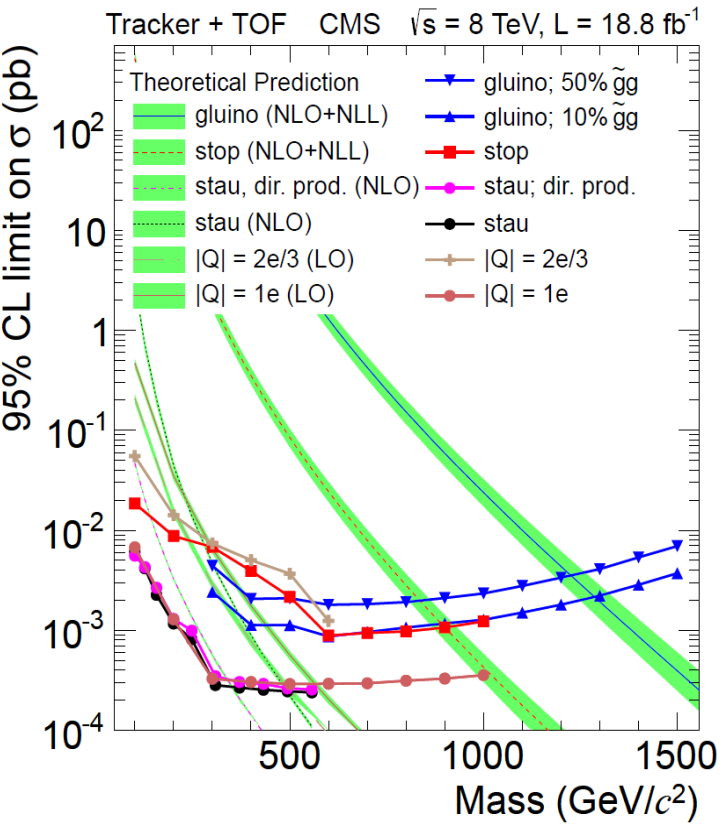

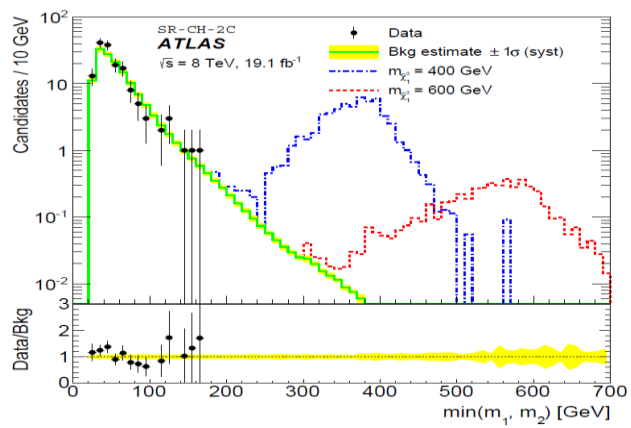

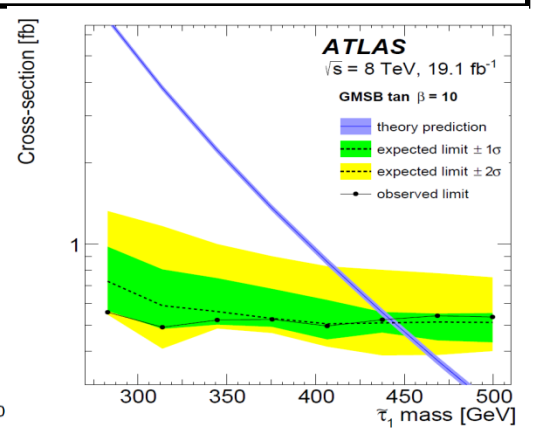

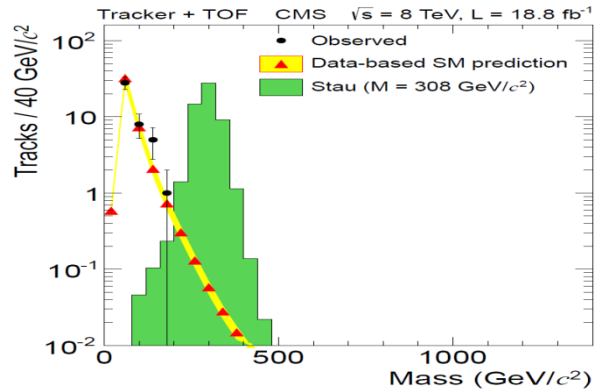

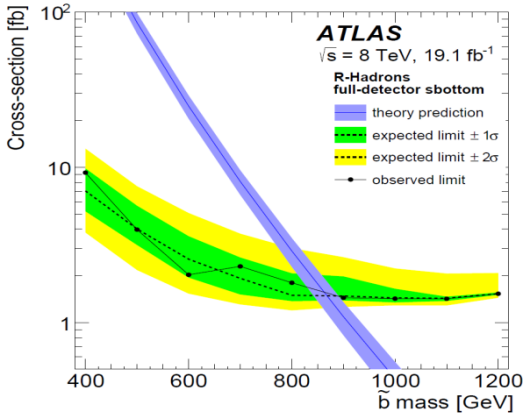

Loic.Quertenmont@cern.ch

Selected Results: R-Hadrons (±→0)

- Search almost identical to the R-Hadron (±→±) search
- Differences are:
  - Trigger efficiency is dominated by MET component
  - TOF measurements from the MS are dropped
  - CMS also considered pessimistic model where Prob(±→0) is ~100%

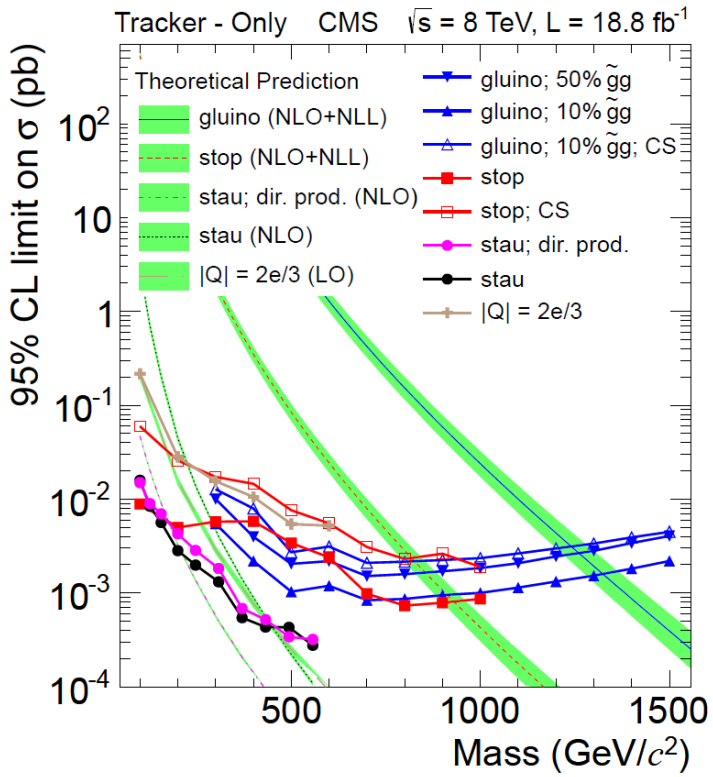

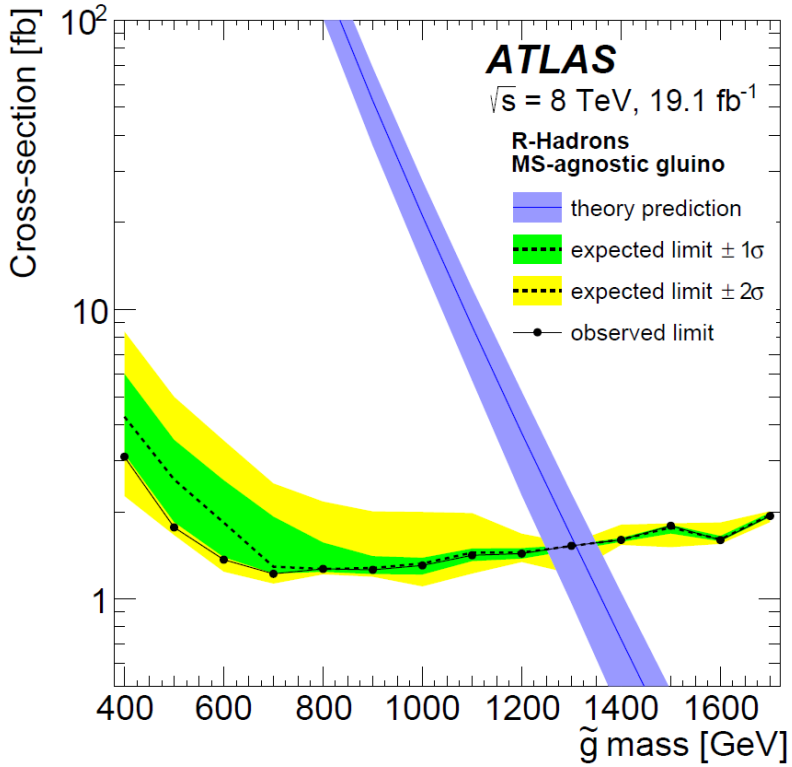

Loic.Quertenmont@cern.ch

ATLAS/CMS Searches

*= apply to $g_D \neq 0$

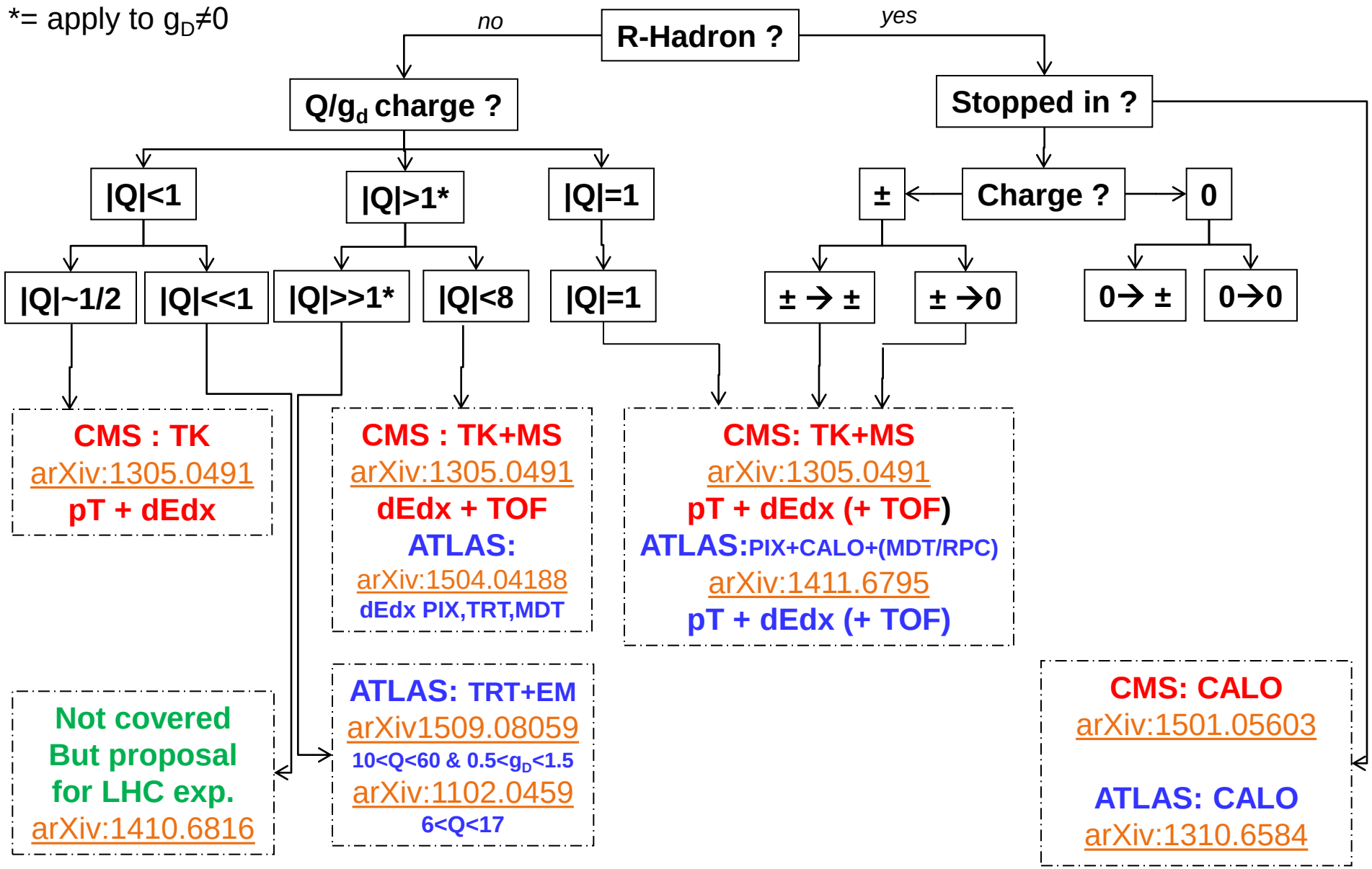

Loic.Quertenmont@cern.ch

ATLAS/CMS Searches

*= apply to $g_D \neq 0$

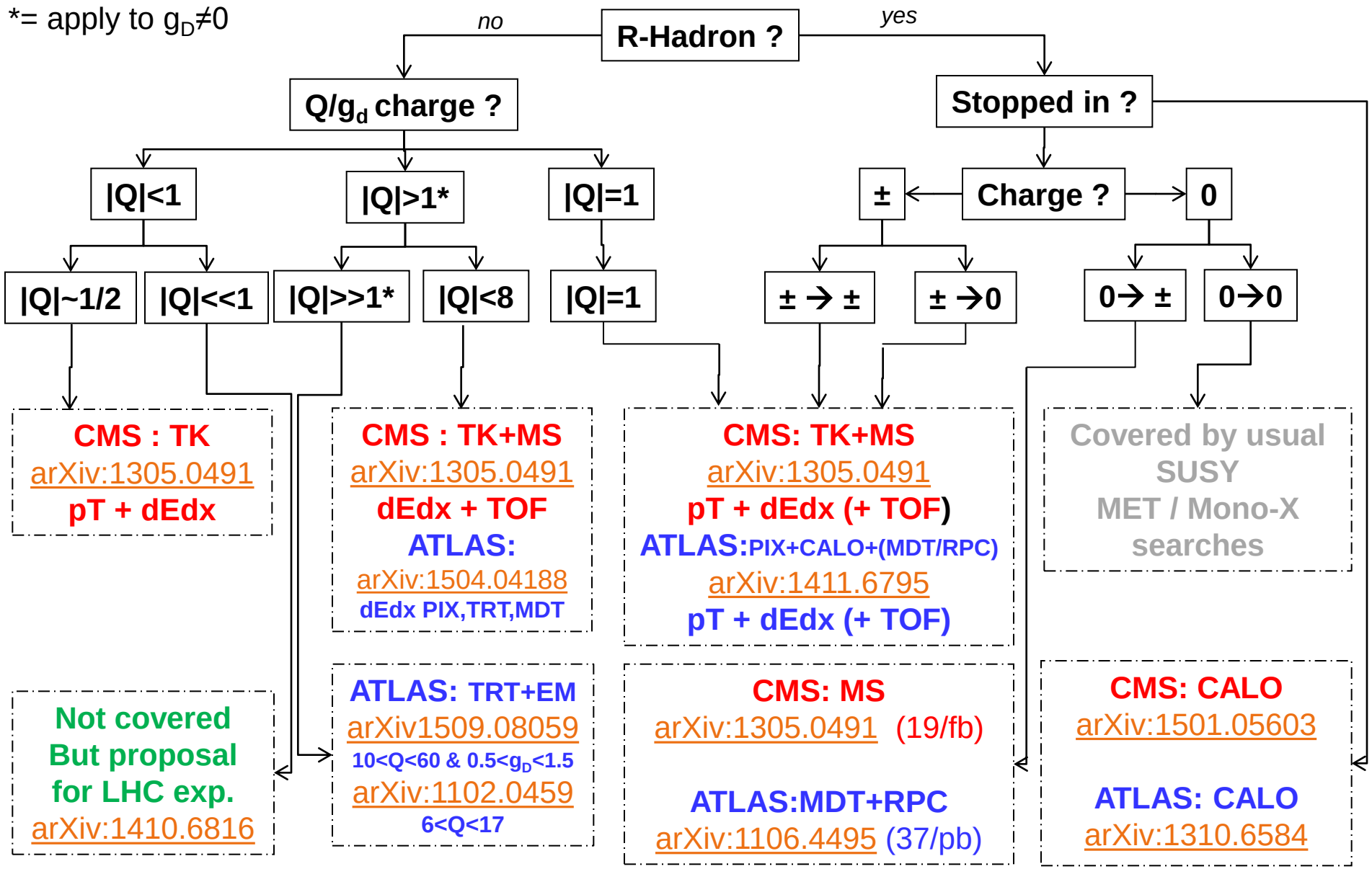

Selected Results: R-Hadrons (0→±)

- Challenges:
  - Invisible in the tracker
  - Worse pT resolution (due to coarser hit position in the MS)
  - High cosmic backgrounds (also out-of-time)
- Solutions:
  - Dedicated trigger (stand alone muons without inner track matching)
  - Tight Cosmic Veto
  - Muon TOF must be compatible with IP collisions

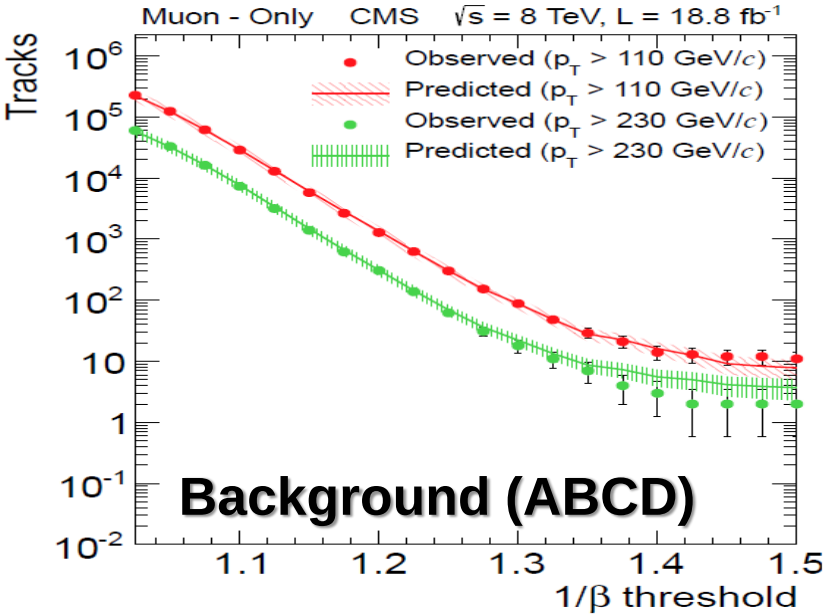

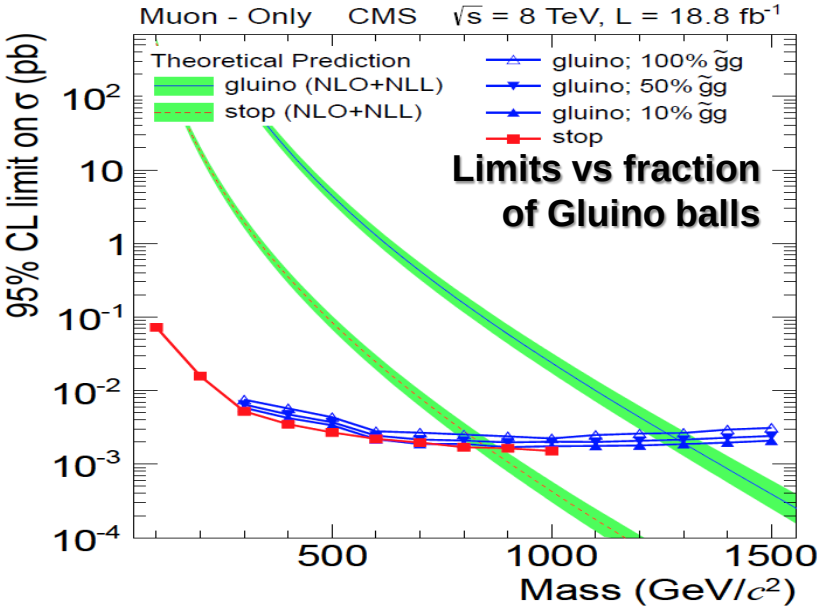

Loic.Quertenmont@cern.ch

Results Recasting

- Despite the important number of HSCP analyses and physics cases studies, we clearly **don't cover the entire space of possibilities**
  - Interaction with matter
  - (R-)hadronization (f gluino balls) or bouding (quirks, dyons)
  - Production mechanisme → kinematics
  - Life time

- Some analyses provide **signal acceptance for**
  - Very **basic assumptions** (e.g. DY-like production)
  - Or even sometimes for a set of **simplified models**

- But, still the possibilities are so many that it is difficult to cover every models and/or ingredients for usual Simplified Model recasting.

RECASTING ENGENEERING NEEDED

Loic.Quertenmont@cern.ch

CMS HSCP recasting (first attempt)

- In CMS, we proposed a new technique to estimate the signal acceptance from generator level information (no assumption on kinematics, mass split, etc.)
- The technique is valid for any number of lepton-like HSCP per event
  - This was a first attempt that could in principle be generalized to Rhadron…

$$\epsilon = \frac{1}{N}\sum_{i}^{N} P^{on}(k_i^1, k_i^2, .., k_i^M) \times P^{off}(M_{req.}, k_i^1, k_i^2, .., k_i^M),$$

arXiv:1502.02522

- Efficiency is decomposed event by event on « online » and « offline » components that only depend on the long-lived particle kinematics:

$$P^{on}(k_i^1, k_i^2) = P^{on}(k_i^1) + P^{on}(k_i^2) - P^{on}(k_i^1) \times P^{on}(k_i^2)$$

$$P^{off}(M_{req.}, k_i^1, k_i^2) = P^{off}(M_{req.}, k_i^1) + P^{off}(M_{req.}, k_i^2) - P^{off}(M_{req.}, k_i^1) \times P^{off}(M_{req.}, k_i^2)$$

- This allows to consider cases where one of the HSCP trigger the event and the second one pass the offline selection.

$P^{on}(k)$ and $P^{of}(M_{req}, k)$ are evaluated using a full simulation of the detector

The functions only depend on the kinematic (η,β,pT) of an individual long-lived particle.

These parameterizations are publicly available (hep-data).

- Recipe to account for HSCP isolation and/or shorter lifetimes are also provided

HSCP recasting toward pMSSM

- HSCP lifetime and isolation can also be taken into account.
- The technique was used to recast CMS results in the context of two models:
  - Both considering cases of « finite lifetime »

pMSSM

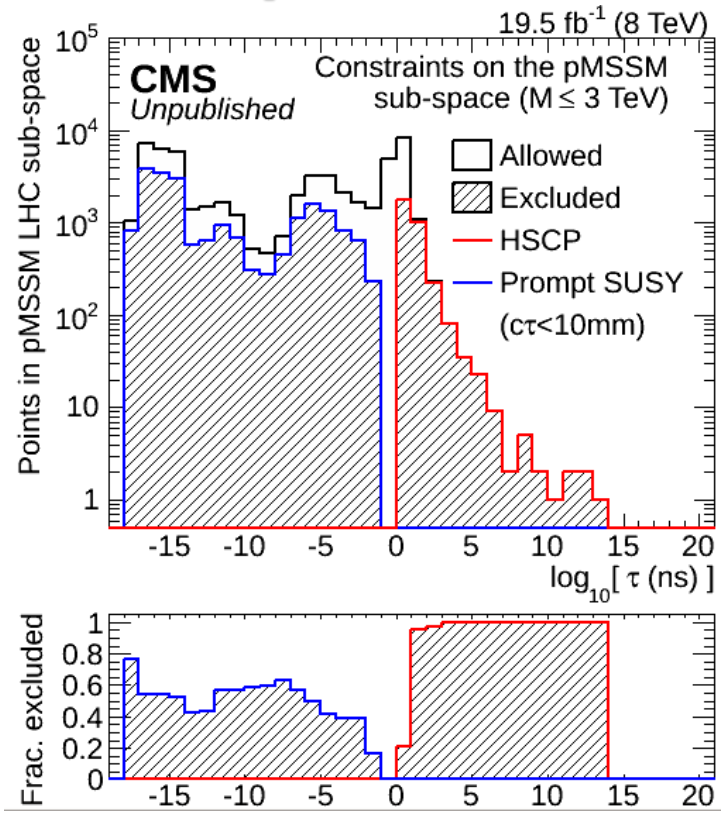

AMSB

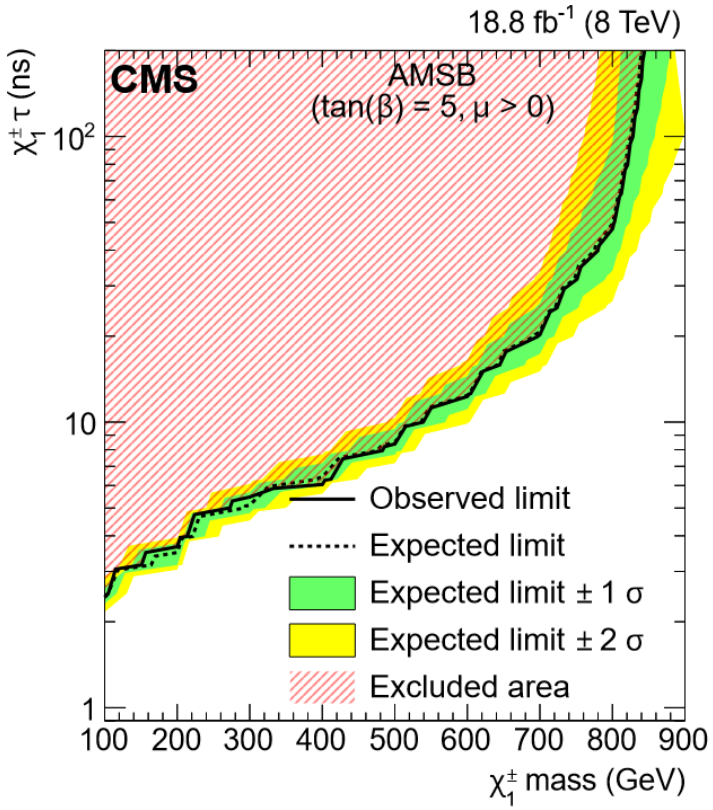

Loic.Quertenmont@cern.ch

Recasting with sModels+HSCP

1. Idea of sModels is to decompose a model in a sum of simplified models (accross channels) and compare the acceptance of each leg to exp. results

arXiv:1509.00473

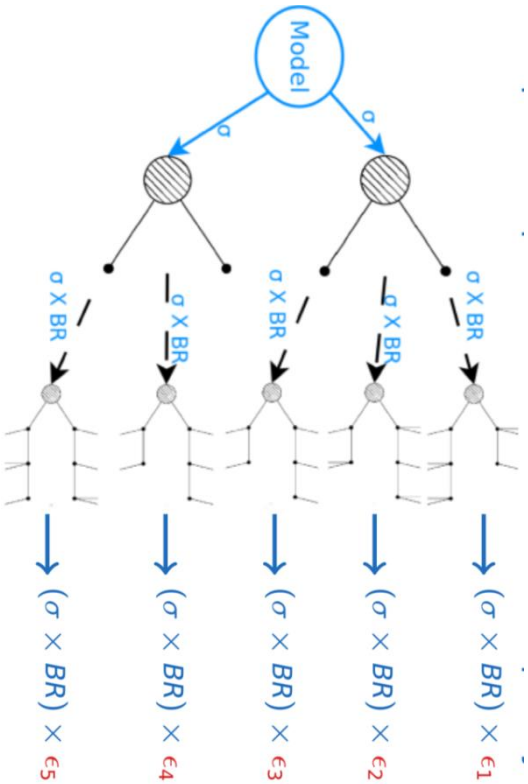

$$\sigma_{eff} = \sum_i (\sigma BR \epsilon_i)$$

2. This was reccently extended to long-lived branches. Acceptance for 8 different simplified models were computed using the CMS recasting techniques:

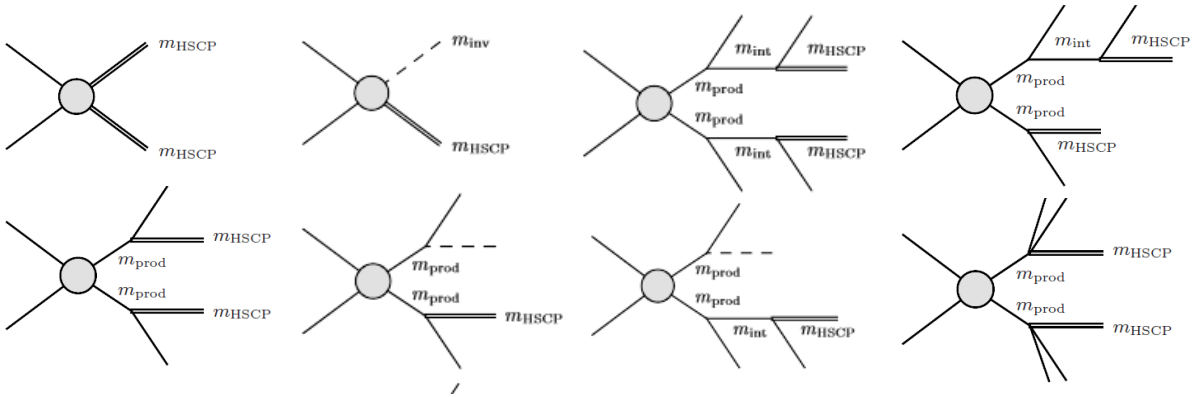

mProd, mInt and mHSCP were all varied from 50GeV to 3TeV

3. Limits were set on CMSSM stau co-annihilation by combining MET and HSCP signatures.

Loic.Quertenmont@cern.ch

Conclusion

- Both ATLAS and CMS have tracked down HSCP using many different techniques
  - Electric charge form e/3 to 60e
  - Magnetic charge from $0.5g_D$ to $1.5g_D$
  - Colour charge (stop, sbottom, gluino)
    - Including a couple of models for hadronization and interaciton w/ matter
  - Lifetimes from $O(10^{-9})$ ns to infinity ($O(10^{8})$ for stopped)

- So far, no signs of HSCP in 7 or 8 TeV LHC data
  - But still many possible place to hide them…
  - 13TeV door is just openning now…

- Still…. only a limited set of models / physics cases were considered
  - Work on reintrepretation/recasting technique started…
  - But more work/ideas are needed

Loic.Quertenmont@cern.ch

More to come at 13TeV…
…Stay tuned!

HSCP

He is a bit slow but really long-lived. And yet to be discovered…

+

Loic.Quertenmont@cern.ch

Backups

Disapearing track & pMSSM

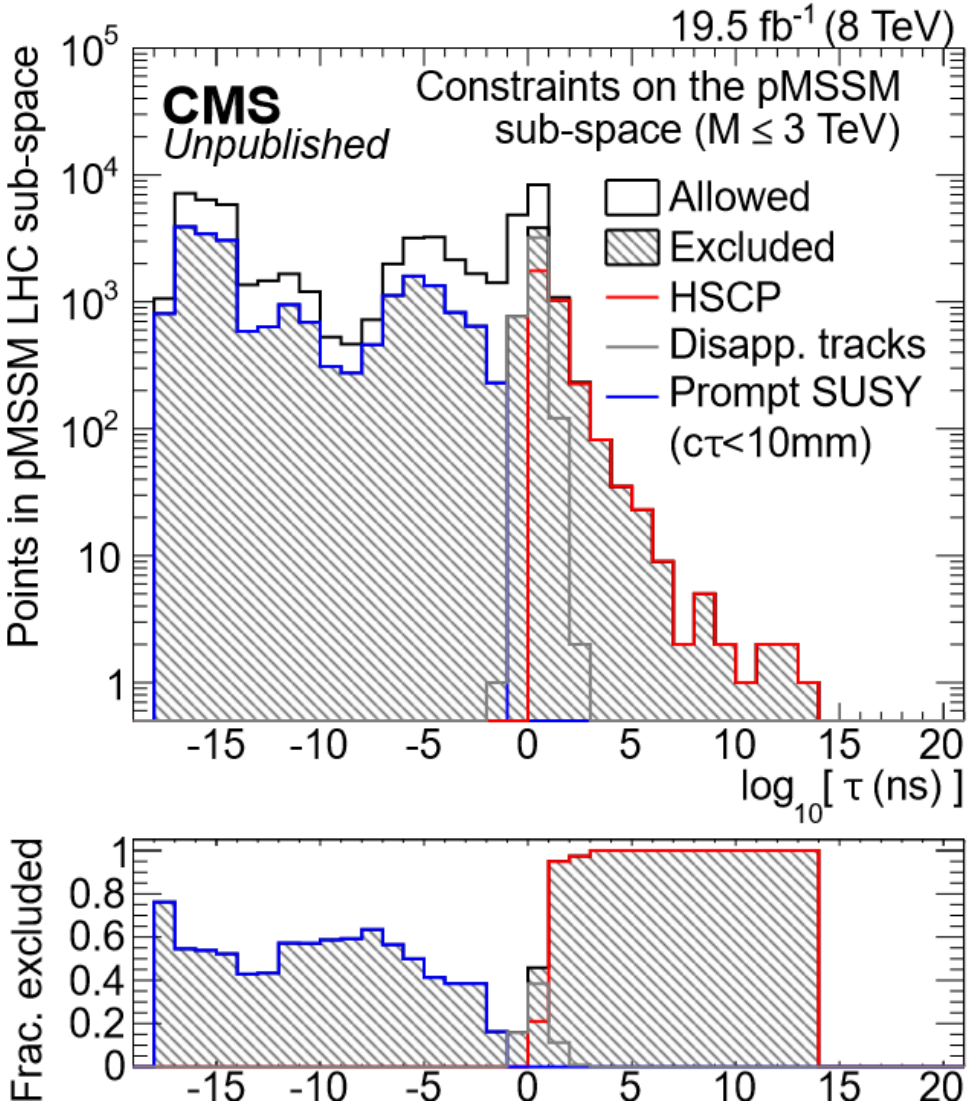

Disapearing track partially filling the gap on LL charginos in pMSSM

But still ~50% to exclude there

Loic.Quertenmont@cern.ch